STATE OF ILLINOIS
CITY OF CHICAGO
BRANDON JOHNSON, MAYOR

PUBLIC BUILDING COMMISSION
RAY GIDEROF, EXECUTIVE DIRECTOR

DEPARTMENT OF TRANSPORTATION
CRAIG TURNER, ACTING COMMISSIONER

CONTRACT PLANS
FOR
PROPOSED IMPROVEMENTS
W. GREENLEAF AVENUE/W. LUNT AVENUE
N. GLENWOOD AVENUE/N. SHERIDAN ROAD

PBC CONTRACT NO.: C1627
CDOT PROJECT NO.: U-5-241
PBC PROJECT NO.: 22926
ISSUED FOR BID: 07/10/2025
CSR NO.: 2306863647
WARD 49

INDEX OF SHEETS

SHEET	DESCRIPTION
1	COVER SHEET
2	ALIGNMENT TIES AND BENCHMARKS
3	GENERAL NOTES
4	SUMMARY OF QUANTITIES
5	PROPOSED CONDITIONS PLAN VIEW
6-9	PLAN AND PROFILE
10	ALLEY APRON DETAILS
11	TYPICAL SECTIONS
12-17	CDOT STANDARD CONSTRUCTION DETAILS
19-21	CDWM STANDARD CONSTRUCTION DETAILS
23-24	IDOT STANDARD DETAILS

STANDARD SYMBOLS

EXISTING	PROPOSED	NAME
		CATCH BASIN
		MANHOLE
		INLET
		UTILITY POLE
		LIGHT POLE
6''		EXISTING TREES WITH DIAMETER
	6''	EXISTING TREES TO BE REMOVED
(X.XX)	X.XX	ELEVATION
	*	MATCH EXISTING ELEVATIONS
		PROPERTY LINE
		RIGHT OF WAY LINE
		CENTER LINE
		CURB OR CURB AND GUTTER
W	W	WATER LINE
G	G	GAS LINE
G	G	ABANDONED GAS
FO	FO	FIBER OPTIC CABLE
E	E	COMMONWEALTH EDISON
		CITY ELECTRIC
T	T	TELEPHONE
		COMBINED STORM SEWER
		REMOVAL LINEAR ITEMS
		STORM SEWER
CTV	CTV	CABLE TV
A	A	AERIAL WIRE
		PORTLAND CEMENT CONCRETE SIDEWALK
		PORTLAND CEMENT CONCRETE DRIVEWAY
		PORTLAND CEMENT CONCRETE GARAGE APRON
		PORTLAND CEMENT CONCRETE ENTRANCE
		HOT MIX ASPHALT RESTORATION
		FULL DEPTH PAVEMENT RESTORATION
		RUBBERIZED SPEED HUMP
		DEPRESSED CURB AND GUTTER

STANDARD ABBREVIATIONS

ABBREVIATION	DEFINITION
ASH	ASPHALT SPEED HUMP
CB	CATCH BASIN
DIP	DUCTILE IRON PIPE
HP	HIGH POINT
MH	MANHOLE
RCP	REINFORCED CONCRETE PIPE
ROW	RIGHT OF WAY
RSH	RUBBERIZED SPEED HUMP
TBM	TEMPORARY BENCHMARK
VCP	VITRIFIED CLAY PIPE

THIS CERTIFIES THAT THESE DRAWINGS HAVE BEEN REVIEWED TO THE BEST OF MY KNOWLEDGE AND I BELIEVE THEY ARE IN ACCORDANCE WITH AMERICANS WITH DISABILITIES ACT (ADA), AND ALL CODES AND BUILDING ORDINANCES OF THE CITY OF CHICAGO, STATE OF ILLINOIS.

LICENSED ARCHITECT / LICENSED ENGINEER

PRIOR TO CONSTRUCTION, THE CONTRACTOR IS REQUIRED TO CALL THE CHICAGO UTILITY ALERT NETWORK (DIGGER/CHICAGO811) AT 312-744-7000 FOR UNDERGROUND UTILITY LOCATIONS.

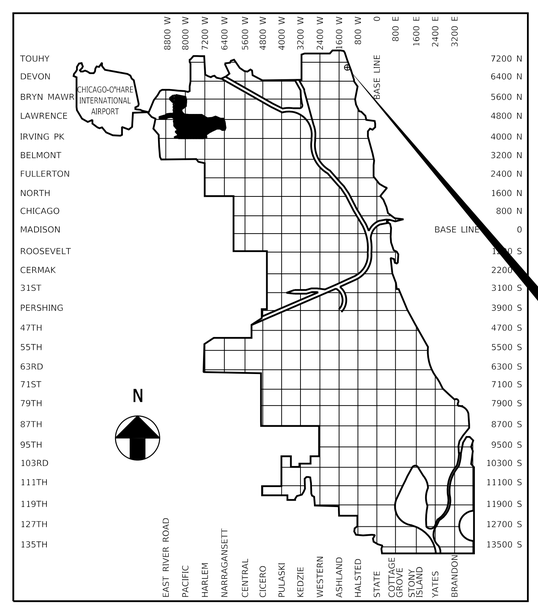

LOCATION MAP

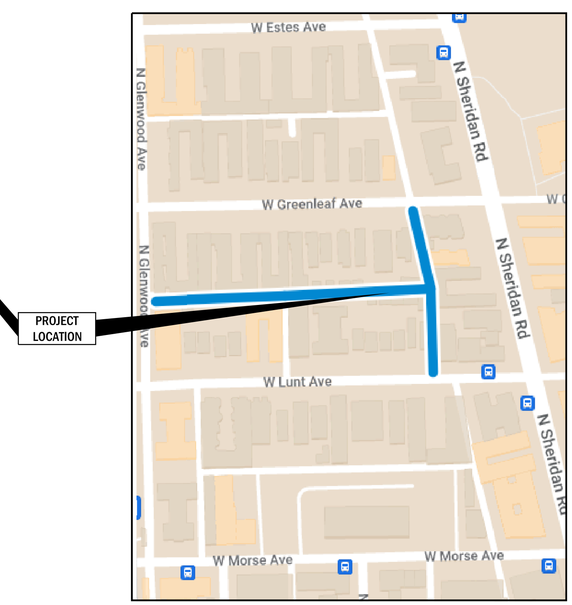

INDEX MAP

LENGTH OF IMPROVEMENT = 1088.6 L.F. (0.21 MILES)

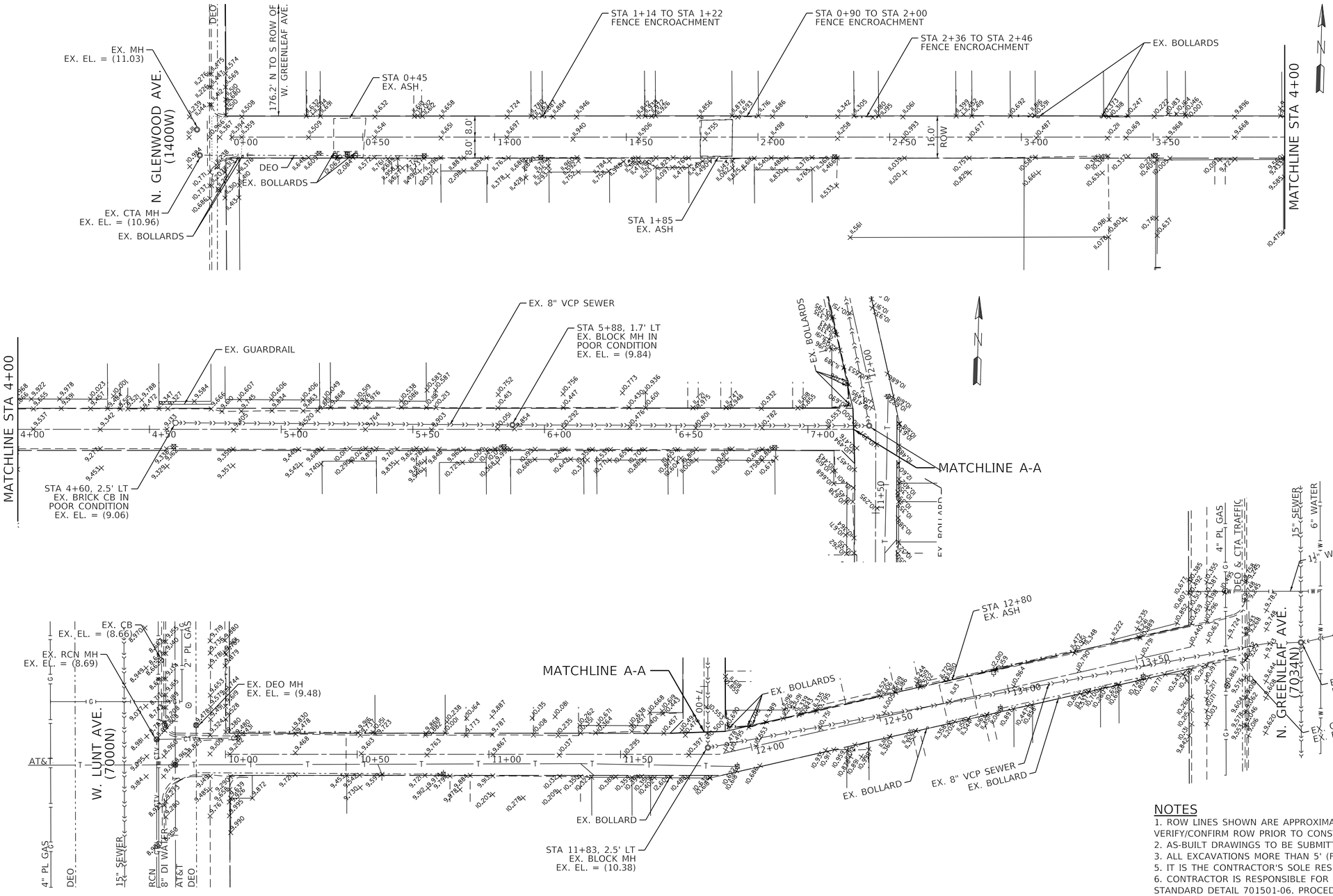

0 20 40 60
SCALE IN FEET

LEGEND

EXISTING ROW LINE
EXISTING LOT LINE

BENCHMARK

CITY OF CHICAGO BENCHMARK #198, ELEV. = 10.315'
13.6' S. OF N. LINE OF W. SHERWIN AVE. AND
7.0' E. OF E. LINE OF N. ASHLAND AVE.

TBM #1 ELEV.=11.348
TOP OF NORTH BOLT OF LIGHT POLE ON EAST SIDE OF N. GLENWOOD AVE. AT WEST END OF ALLEY.

TBM #2 ELEV.=11.348
SET LARGE NAIL IN SOUTH FACE OF POWER POLE ON SOUTHEAST CORNER OF ALLEY AT "TEE" SOUTH OF 1351 W. GREENLEAF AVE.

NOTES

1. ROW LINES SHOWN ARE APPROXIMATE AND FOR REFERENCE ONLY. CONTRACTOR IS TO VERIFY/CONFIRM ROW PRIOR TO CONSTRUCTION.
2. AS-BUILT DRAWINGS TO BE SUBMITTED TO DWM.
3. ALL EXCAVATIONS MORE THAN 5' (FEET) DEEP MUST COMPLY WITH OSHA REQUIREMENTS.
5. IT IS THE CONTRACTOR'S SOLE RESPONSIBILITY TO COMPLY WITH ALL OSHA REQUIREMENTS.
6. CONTRACTOR IS RESPONSIBLE FOR ALLEY CLOSURE PROCEDURES FOLLOWING GUIDELINES OF IDOT STANDARD DETAIL 701501-06. PROCEDURE TO INCLUDE: NOTIFYING BUILDINGS WITHIN PROJECT LIMITS OF EXACT START DATE IN WHICH ALLEY WILL BE CLOSED AND PLACING APPROPRIATE SIGNING AND BARRICADES IN ADVANCE OF ALLEY CLOSURE.

MODEL: Default
FILE NAME: \\cnect-fs001\cnect-nas_2025_Projects\Green Alley\0 PBC Alley Revisions\2025\Package 6\CADD Drawings\23-CP37_W. Greenleaf Ave & N. Glenwood Ave\CADD Sheets\CP37-cht-align-1.dgn

USER NAME = AB	DESIGNED - AP	REVISED -	
	DRAWN - AP	REVISED -	
PLOT SCALE = 20.0000 ' / in.	CHECKED - SJ	REVISED -	
PLOT DATE = 7/1/2025	DATE - 07/01/2025	ISSUED FOR BID - 07/10/2025	

CITY OF CHICAGO
DEPARTMENT OF TRANSPORTATION
49th WARD

ALIGNMENT TIES AND BENCHMARKS
PBC PROJECT NO #22926
W. GREENLEAF AVENUE - W. LUNT AVENUE
N. GLENWOOD AVENUE - N. SHERIDAN ROAD

OUC NUMBER	COUNTY	TOTAL SHEETS	SHEET NO.
OUC IR #123805	COOK	24	2
STA. TO STA.	SCALE: AS SHOWN		

GENERAL NOTES

1. CONTRACTOR WILL BE REQUIRED TO PREPARE A PHASING AND LOGISTICS PLAN WITHIN 30 DAYS OF NTP FOR REVIEW AND APPROVAL BY CDOT AND PBC, PRIOR TO MOBILIZATION AND COMMENCEMENT OF ANY WORK.

2. CONTRACTOR SHALL PROVIDE CRITICAL SUBMITTALS, INCLUDING SEWER AND DRAINAGE STRUCTURES, WITHIN 30 DAYS OF ISSUANCE OF THE NTP.

3. ON-SITE CONSTRUCTION WORK AT EACH ALLEY LOCATION MUST BE COMPLETED WITHIN 45 CALENDAR DAYS FROM COMMENCEMENT.

SUMMARY OF QUANTITIES

Line	Code Number	Description	Unit	Estimated Quantity	Unit Price	Cost
1	********	EARTH EXCAVATION (SOIL TO CCDD FACILITY)	CU YD	414.0	$0.00	$0.00
2	********	EARTH EXCAVATION (SOIL TO LANDFILL)	CU YD	576.0	$0.00	$0.00
3	********	PAVEMENT REMOVAL	SQ YD	34.0	$0.00	$0.00
4	********	DRIVEWAY AND ALLEY RETURN PAVEMENT REMOVAL	SQ YD	92.0	$0.00	$0.00
5	44000300	CURB REMOVAL	LIN FT	144.0	$0.00	$0.00
6	44000500	COMBINATION CURB AND GUTTER REMOVAL	LIN FT	129.0	$0.00	$0.00
7	44000600	SIDEWALK REMOVAL	SQ FT	420.0	$0.00	$0.00
8	********	ALLEY PAVEMENT REMOVAL	SQ YD	1938.0	$0.00	$0.00
9	********	GARAGE APRON REMOVAL	SQ FT	1292.0	$0.00	$0.00
10	********	HOT-MIX ASPHALT SURFACE REMOVAL, VARIABLE DEPTH	SQ YD	265.0	$0.00	$0.00
11	31101100	SUB-BASE GRANULAR MATERIAL, TYPE B	CU YD	256.0	$0.00	$0.00
12	********	CONCRETE ALLEY FILL, CA-1	CU YD	220.0	$0.00	$0.00
13	20800150	TRENCH BACKFILL	CU YD	53.0	$0.00	$0.00
14	********	PERVIOUS AGGREGATE SUBBASE	CU YD	171.0	$0.00	$0.00
15	********	BEDDING AND VOID OPENING AGGREGATES FOR PERMEABLE PAVERS	CU YD	25.0	$0.00	$0.00
16	********	CRUSHED STONE (TEMPORARY USE)	TON	60.0	$0.00	$0.00
17	35300300	PORTLAND CEMENT CONCRETE BASE COURSE, 8 IN	SQ YD	34.0	$0.00	$0.00
18	35300500	PORTLAND CEMENT CONCRETE BASE COURSE, 10 IN	SQ YD	0.0	$0.00	$0.00
19	********	HIGH EARLY STRENGTH PORTLAND CEMENT CONCRETE ALLEY PAVEMENT, 8 IN	SQ YD	1125.0	$0.00	$0.00
20	********	HIGH EARLY STRENGTH PORTLAND CEMENT CONCRETE DRIVEWAY AND ALLEY RETURN PAVEMENT, 8 IN	SQ YD	0.0	$0.00	$0.00
21	********	HIGH EARLY STRENGTH PORTLAND CEMENT CONCRETE GARAGE APRON, 8 IN	SQ FT	1292.0	$0.00	$0.00
22	********	HIGH EARLY STRENGTH PORTLAND CEMENT CONCRETE SIDEWALK, 8 IN	SQ FT	247.0	$0.00	$0.00
23	********	HIGH EARLY STRENGTH PORTLAND CEMENT CONCRETE BASE COURSE, 8 IN	SQ YD	0.0	$0.00	$0.00
24	********	HIGH EARLY STRENGTH PORTLAND CEMENT CONCRETE BASE COURSE, 10 IN	SQ YD	0.0	$0.00	$0.00
25	********	PORTLAND CEMENT CONCRETE SIDEWALK, 5 IN	SQ FT	240.0	$0.00	$0.00
26	********	PORTLAND CEMENT CONCRETE ADA CURB RAMP, 5 IN	SQ FT	180.0	$0.00	$0.00
27	********	HIGH EARLY STRENGTH PORTLAND CEMENT CONCRETE ADA CURB RAMP, 8 IN	SQ FT	0.0	$0.00	$0.00
28	********	DRILL AND GROUT DOWEL AND TIE BARS	EACH	187.0	$0.00	$0.00
29	********	PERMEABLE CONCRETE BLOCK PAVERS	SQ FT	7952.0	$0.00	$0.00
30	40600290	BITUMINOUS MATERIALS (TACK COAT)	POUND	136.0	$0.00	$0.00
31	********	HOT-MIX ASPHALT SURFACE COURSE, IL-9.5LH, MIX "C", N30 (CDOT)	TON	0.0	$0.00	$0.00
32	********	HOT-MIX ASPHALT SURFACE COURSE, PATCH, N30 (6 FT OR LESS)	TON	36.0	$0.00	$0.00
33	********	HOT-MIX ASPHALT SURFACE COURSE, PATCH, N70 (6 FT OR LESS)	TON	0.0	$0.00	$0.00
34	60600605	CONCRETE CURB, TYPE B	LIN FT	261.0	$0.00	$0.00
35	********	HIGH EARLY STRENGTH PORTLAND CEMENT CONCRETE COMBINATION CURB AND GUTTER, TYPE B-V.12	LIN FT	94.0	$0.00	$0.00
36	********	COMBINATION CONCRETE CURB AND GUTTER, TYPE B-V.12	LIN FT	35.0	$0.00	$0.00
37	********	MANHOLE, 3 FT DIAMETER, TYPE B, FRAME AND CLOSED LID (CITY OF CHICAGO)	EACH	0.0	$0.00	$0.00
38	********	MANHOLE, 3 FT DIAMETER, TYPE A, FRAME AND CLOSED LID (CITY OF CHICAGO)	EACH	0.0	$0.00	$0.00
39	********	CATCH BASIN, TYPE A, 4 FT DIAMETER, TYPE 1 FRAME, OPEN LID (CITY OF CHICAGO)	EACH	2.0	$0.00	$0.00
40	********	INLETS, TYPE A, TYPE 1 FRAME, OPEN LID (CITY OF CHICAGO)	EACH	0.0	$0.00	$0.00
41	********	DRAINAGE AND UTILITY STRUCTURES TO BE ADJUSTED	EACH	2.0	$0.00	$0.00
42	********	VORTEX RESTRICTOR	EACH	1.0	$0.00	$0.00
43	********	STORM SEWERS, EXTRA STRENGTH VITRIFIED CLAY PIPE, 8 IN	LIN FT	5.0	$0.00	$0.00
44	********	STORM SEWERS, DUCTILE IRON PIPE, 8 IN	LIN FT	0.0	$0.00	$0.00
45	********	STORM SEWERS, EXTRA STRENGTH VITRIFIED CLAY PIPE, 10 IN	LIN FT	0.0	$0.00	$0.00
46	********	STORM SEWERS, EXTRA STRENGTH VITRIFIED CLAY PIPE, 12 IN	LIN FT	0.0	$0.00	$0.00
47	********	STORM SEWERS, DUCTILE IRON PIPE, 12 IN	LIN FT	260.0	$0.00	$0.00
48	********	STORM SEWERS, REINFORCED CONCRETE PIPE, 30 IN.	LIN FT	0.0	$0.00	$0.00
49	********	CIP OR PRECAST CONCRETE REDUCER	EACH	0.0	$0.00	$0.00
50	CDOT SP 550-3	ABANDON AND FILL EXISTING COMBINED SEWER	LIN FT	0.0	$0.00	$0.00
51	********	EXISTING SEWER TO BE REMOVED	LIN FT	260.0	$0.00	$0.00
52	********	REMOVING MANHOLES	EACH	1.0	$0.00	$0.00
53	********	REMOVING CATCH BASINS	EACH	1.0	$0.00	$0.00
54	********	REMOVING INLETS	EACH	0.0	$0.00	$0.00
55	********	SEWER CLEANING AND TELEVISING (24 IN DIAMETER OR LESS)	LIN FT	229.0	$0.00	$0.00
56	60100085	GEOTECHNICAL FABRIC	SQ YD	1273.0	$0.00	$0.00
57	********	PULVERIZED TOPSOIL MIX	CU YD	12.3	$0.00	$0.00
58	********	HYDRAULIC SEEDING, CLASS 1A	SQ YD	21.0	$0.00	$0.00
59	78000200	THERMOPLASTIC PAVEMENT MARKING, LINE 4 IN	LIN FT	0.0	$0.00	$0.00
60	********	CONSTRUCTION SIGNS	SQ FT	64.0	$0.00	$0.00
61	********	PREMOLDED RUBBER SPEED HUMPS	EACH	4.0	$0.00	$0.00
62	********	REMOVE AND SALVAGE SIGN PANEL AND POLE ASSEMBLY	EACH	0.0	$0.00	$0.00
63	********	CURB PAINTING	LIN FT	0.0	$0.00	$0.00
64	CDOT SP 905-1	MEMBRANE WATERPROOFING SYSTEM	SQ FT	851.0	$0.00	$0.00

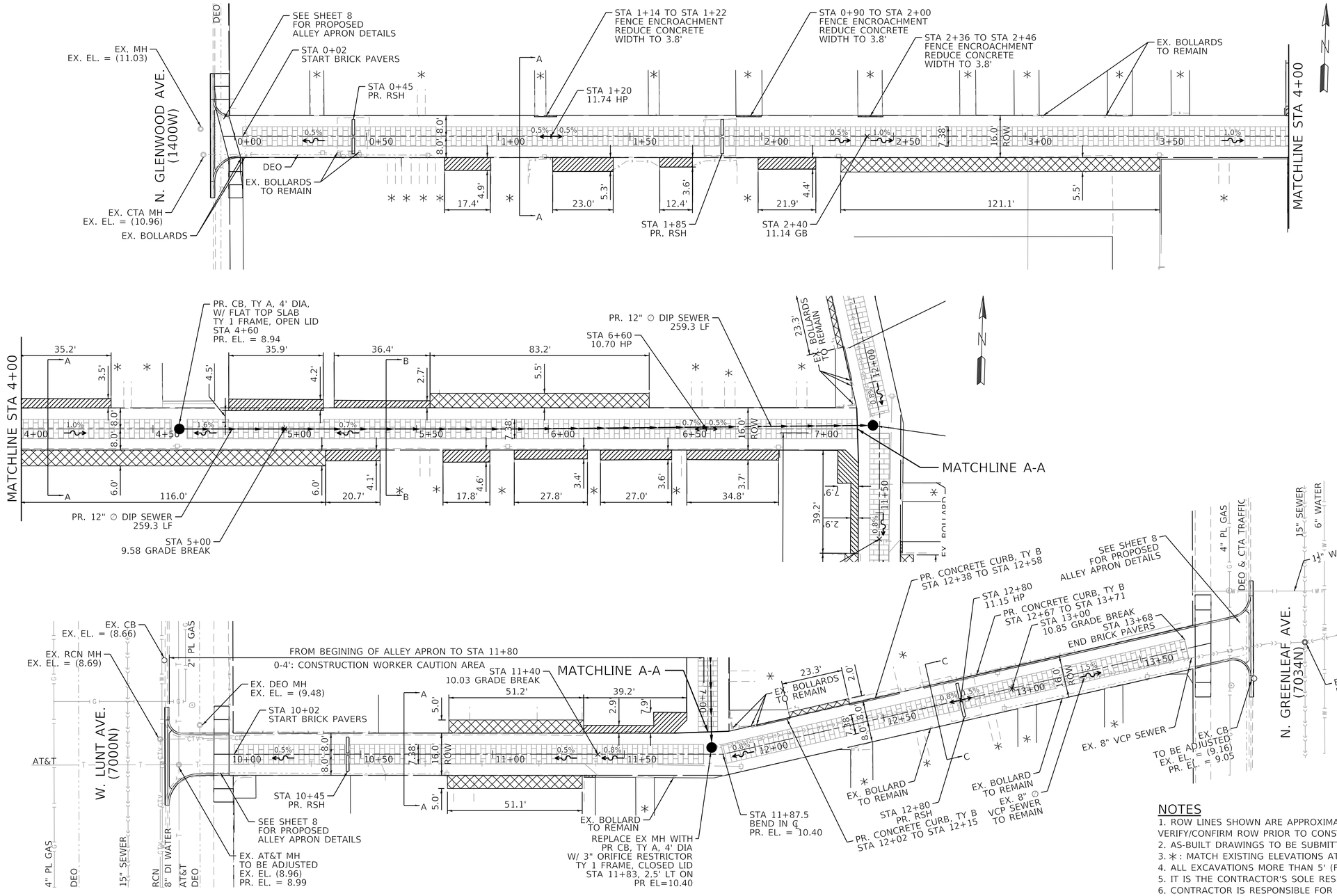

LEGEND

———	EXISTING ROW LINE
— — ·	EXISTING LOT LINE
HP	HIGH POINT
	PROPOSED RUBBERIZED SPEED HUMP
	REMOVE & REPLACE GARAGE APRONS
	REMOVE & REPLACE ENTRANCES
	HMA RESTORATION

BENCHMARK

CITY OF CHICAGO BENCHMARK #198, ELEV. = 10.315'
13.6' S. OF N. LINE OF W. SHERWIN AVE. AND
7.0' E. OF E. LINE OF N. ASHLAND AVE.

TBM #1 ELEV.=11.348
TOP OF NORTH BOLT OF LIGHT POLE ON EAST SIDE OF N. GLENWOOD AVE. AT WEST END OF ALLEY.

TBM #2 ELEV.=11.348
SET LARGE NAIL IN SOUTH FACE OF POWER POLE ON SOUTHEAST CORNER OF ALLEY AT "TEE" SOUTH OF 1351 W. GREENLEAF AVE.

NOTES

1. ROW LINES SHOWN ARE APPROXIMATE AND FOR REFERENCE ONLY. CONTRACTOR IS TO VERIFY/CONFIRM ROW PRIOR TO CONSTRUCTION.
2. AS-BUILT DRAWINGS TO BE SUBMITTED TO DWM.
3. ∗ : MATCH EXISTING ELEVATIONS AT ALL PRIVATE ENTRANCES AND GATES.
4. ALL EXCAVATIONS MORE THAN 5' (FEET) DEEP MUST COMPLY WITH OSHA REQUIREMENTS.
5. IT IS THE CONTRACTOR'S SOLE RESPONSIBILITY TO COMPLY WITH ALL OSHA REQUIREMENTS.
6. CONTRACTOR IS RESPONSIBLE FOR ALLEY CLOSURE PROCEDURES FOLLOWING GUIDELINES OF IDOT STANDARD DETAIL 701501-06. PROCEDURE TO INCLUDE: NOTIFYING BUILDINGS WITHIN PROJECT LIMITS OF EXACT START DATE IN WHICH ALLEY WILL BE CLOSED AND PLACING APPROPRIATE SIGNING AND BARRICADES IN ADVANCE OF ALLEY CLOSURE.
7. USE EXTREME CAUTION NEAR COMED FACILITIES. HAND DIG WHILE CROSSING ALL 69/138/345 k/V TRANSMISSION LINE. COMED TRANSMISSION SHALL BE NOTIFIED TWO (2) BUSINESS DAYS PRIOR TO THE START OF WORK. TO SCHEDULE AN ONSITE INSPECTOR DURING CONSTRUCTION, CONTACT LESLIE PASCHAL AT (630) 437-4767.
8. IF CB IS NOT ALREADY RESTRICTED VIA VORTEX, CONTRACTOR IS TO VERIFY/INSTALL A VORTEX RESTRICTOR TO CB. TELEVISE CB BEFORE/AFTER CONSTRUCTION AND REPAIR/REPLACE LINE AS NEEDED.

MODEL: Default
FILE NAME: \\cnect-fs001\cnect-nas_2025\Projects\Green Alley\0 PBC Alley Revisions\2025\Package 6\CADD Drawings\23-CP37_W. Greenleaf Ave & N. Glenwood Ave\CADD Sheets\CP37-cht-align-2.dgn

USER NAME = AB	DESIGNED - AP	REVISED -	
	DRAWN - AP	REVISED -	
PLOT SCALE = 20.0000 ' / in.	CHECKED - SJ	REVISED -	
PLOT DATE = 7/1/2025	DATE - 07/01/2025	ISSUED FOR BID - 07/10/2025	

CITY OF CHICAGO
DEPARTMENT OF TRANSPORTATION
49th WARD

PROPOSED CONDITIONS PLAN VIEW
PBC PROJECT NO #22926
W. GREENLEAF AVENUE - W. LUNT AVENUE
N. GLENWOOD AVENUE - N. SHERIDAN ROAD

OUC NUMBER	COUNTY	TOTAL SHEETS	SHEET NO.
OUC IR #123805	COOK	24	5
STA. TO STA.	SCALE: AS SHOWN		

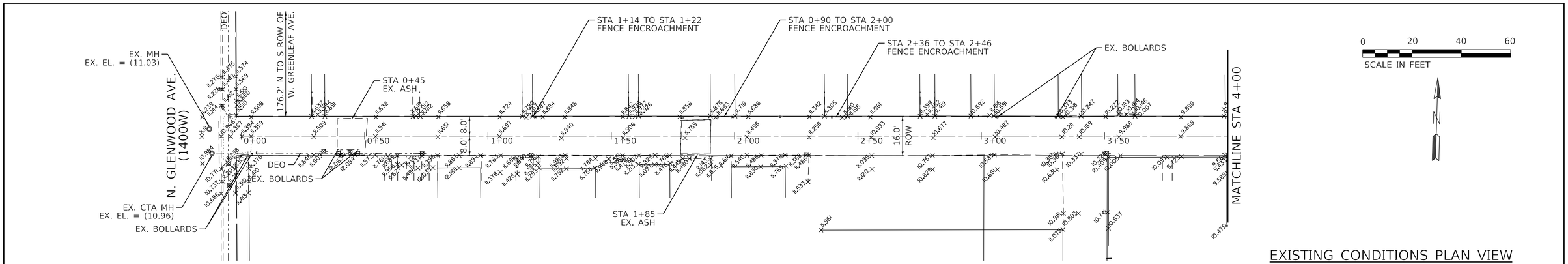

EXISTING CONDITIONS PLAN VIEW

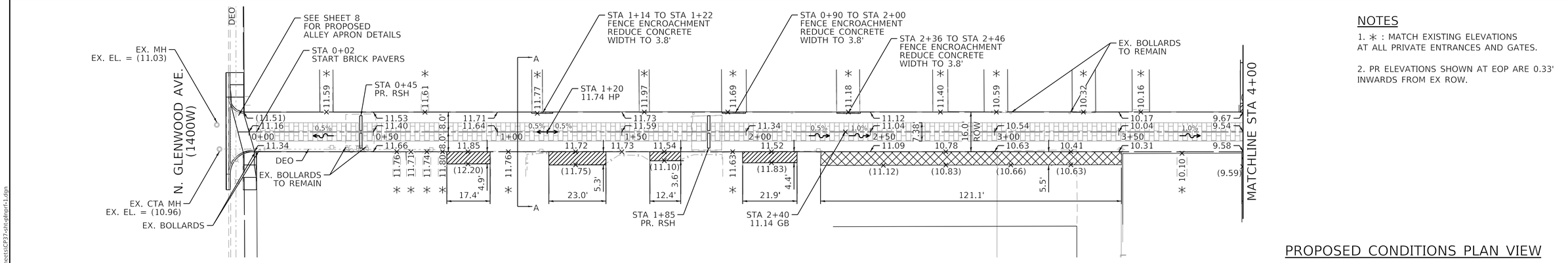

PROPOSED CONDITIONS PLAN VIEW

NOTES

1. ∗ : MATCH EXISTING ELEVATIONS AT ALL PRIVATE ENTRANCES AND GATES.

2. PR ELEVATIONS SHOWN AT EOP ARE 0.33' INWARDS FROM EX ROW.

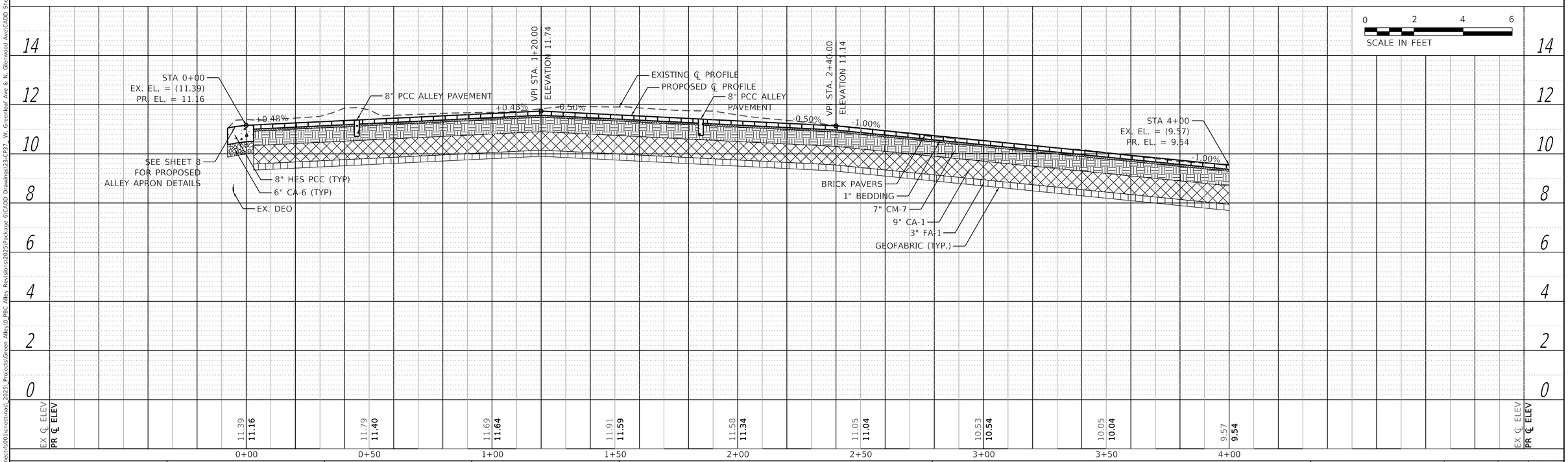

PLAN	
SURVEYED	
PLOTTED	
ALIGNMENT CHECKED	
RT. OF WAY CHECKED	
CADD FILE NAME	
NOTE BOOK	
NO.	

PROFILE	
SURVEYED	
PLOTTED	
GRADES CHECKED	
B.M. NOTED	
STRUCTURE NOTATNS CHKD	
NOTE BOOK	
NO.	

BY | DATE

MODEL: Default
FILE NAME: \\cnect-s001\cnect-nas_2025_Projects\Green Alley\0_PBC Alley Revisions\2025\Package 6\CADD Drawings\23-CP37_W. Greenleaf Ave & N. Glenwood Ave\CADD Sheets\CP37-sht-plnprf-1.dgn

CDOT

USER NAME = AB	DESIGNED - AP	REVISED -	
	DRAWN - AP	REVISED -	
PLOT SCALE = 20.0000 ' / in.	CHECKED - SJ	REVISED -	
PLOT DATE = 7/1/2025	DATE - 07/01/2025	ISSUED FOR BID - 07/10/2025	

CITY OF CHICAGO
DEPARTMENT OF TRANSPORTATION
49th WARD

PLAN AND PROFILE
PBC PROJECT NO #22926
W. GREENLEAF AVENUE - W. LUNT AVENUE
N. GLENWOOD AVENUE - N. SHERIDAN ROAD

OUC NUMBER	COUNTY	TOTAL SHEETS	SHEET NO.
OUC IR #123805	COOK	24	6
STA. TO STA.	SCALE: AS SHOWN		

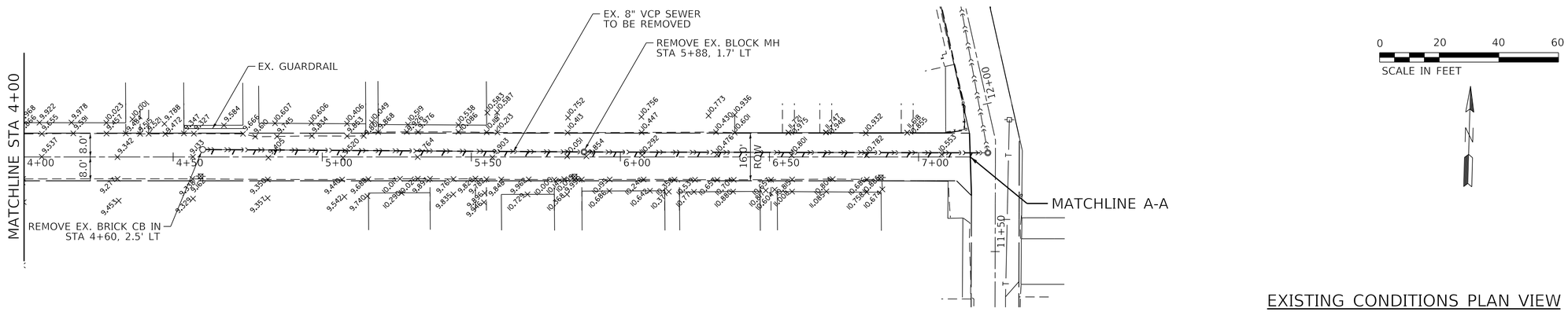

EXISTING CONDITIONS PLAN VIEW

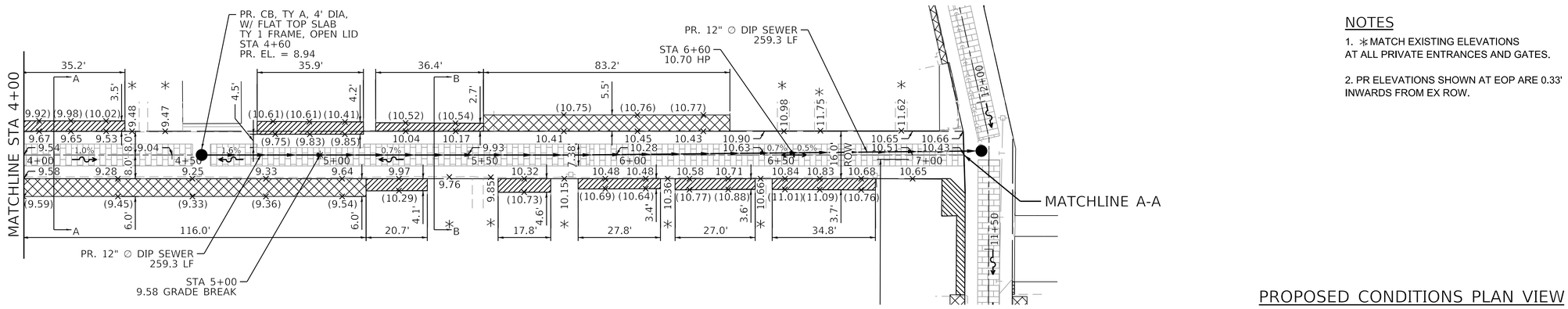

NOTES

1. ✳MATCH EXISTING ELEVATIONS AT ALL PRIVATE ENTRANCES AND GATES.

2. PR ELEVATIONS SHOWN AT EOP ARE 0.33' INWARDS FROM EX ROW.

PROPOSED CONDITIONS PLAN VIEW

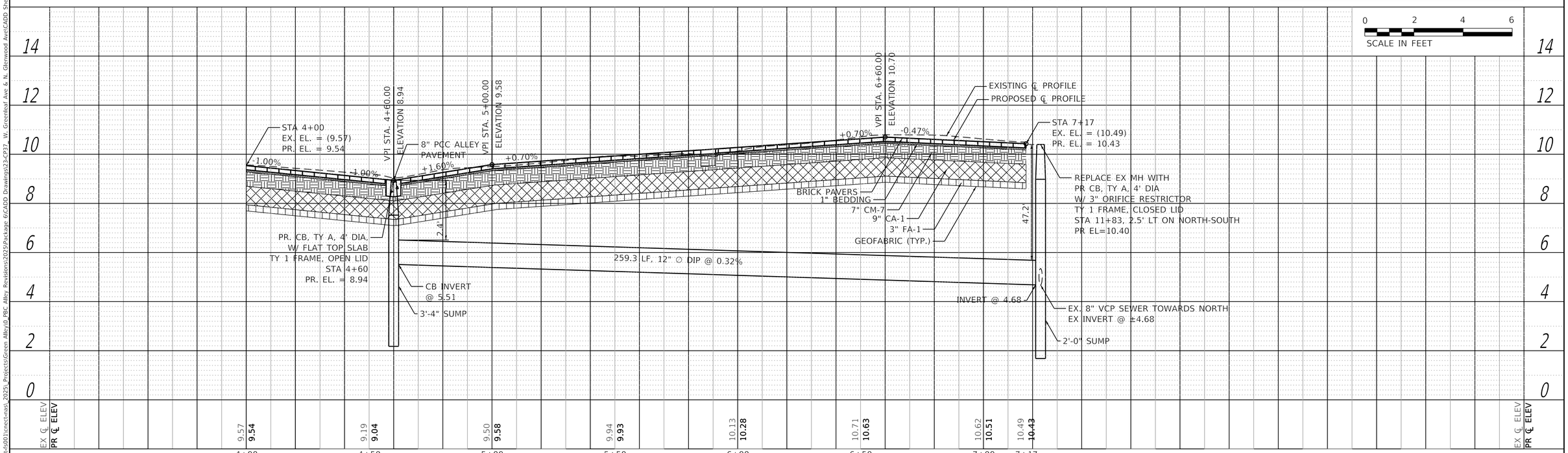

USER NAME = AB	DESIGNED - AP	REVISED -	
	DRAWN - AP	REVISED -	
PLOT SCALE = 20.0000 ' / in.	CHECKED - SJ	REVISED -	
PLOT DATE = 7/1/2025	DATE - 07/01/2025	ISSUED FOR BID - 07/10/2025	

CITY OF CHICAGO
DEPARTMENT OF TRANSPORTATION
49th WARD

PLAN AND PROFILE
PBC PROJECT NO #22926
W. GREENLEAF AVENUE - W. LUNT AVENUE
N. GLENWOOD AVENUE - N. SHERIDAN ROAD

OUC NUMBER	COUNTY	TOTAL SHEETS	SHEET NO.
OUC IR #123805	COOK	24	7
STA. TO STA.	SCALE: AS SHOWN		

PLAN — SURVEYED / PLOTTED / ALIGNMENT CHECKED / RT. OF WAY CHECKED / CADD FILE NAME / NOTE BOOK NO. / BY / DATE

PROFILE — SURVEYED / PLOTTED / GRADES CHECKED / B.M. NOTED / STRUCTURE NOTATNS CHKD / NOTE BOOK NO. / BY / DATE

MODEL: Default
FILE NAME: \\cnect-fs001\cnect-nas_2025_Projects\Green Alley\0_PBC Alley Revisions\2025\Package 6\CADD Drawings\23-CP37_W. Greenleaf Ave & N. Glenwood Ave\CADD Sheets\CP37-sht-pltprf-2.dgn

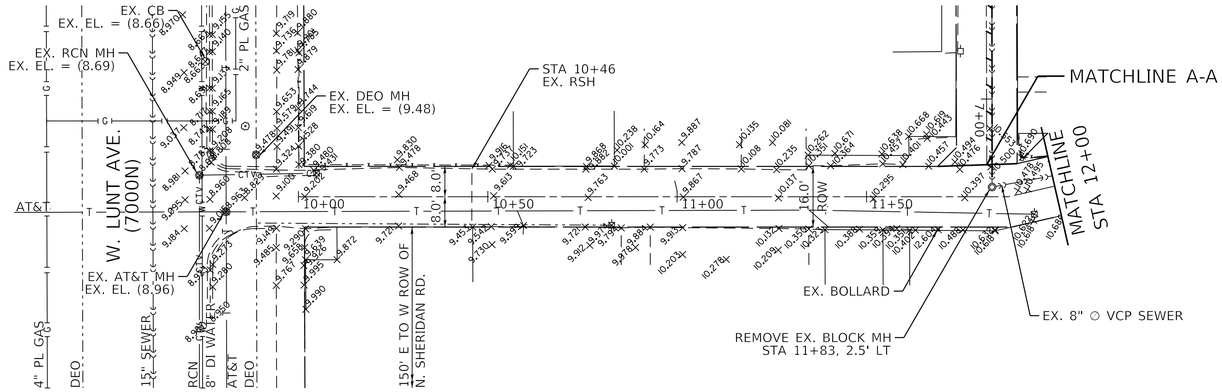

EXISTING CONDITIONS PLAN VIEW

0 20 40 60
SCALE IN FEET

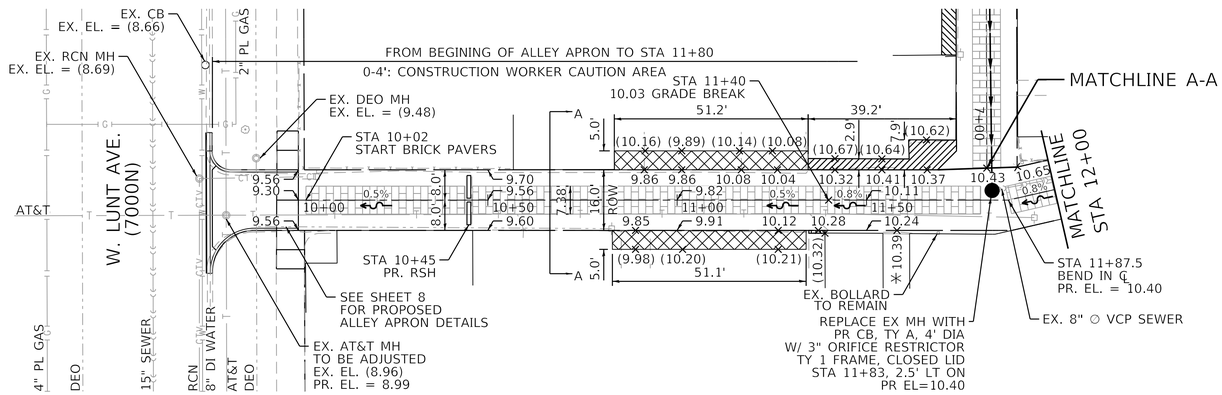

PROPOSED CONDITIONS PLAN VIEW

NOTES

1. ✱MATCH EXISTING ELEVATIONS AT ALL PRIVATE ENTRANCES AND GATES.

2. PR ELEVATIONS SHOWN AT EOP ARE 0.33' INWARDS FROM EX ROW.

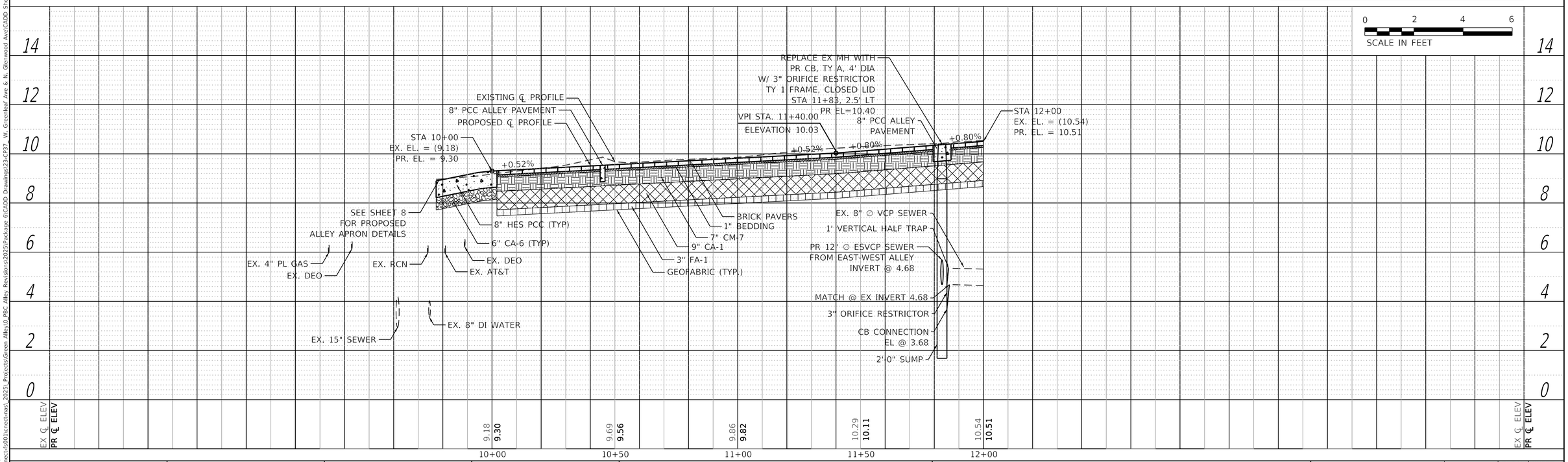

USER NAME = AB	DESIGNED - AP	REVISED -	
	DRAWN - AP	REVISED -	
PLOT SCALE = 20.0000 ' / in.	CHECKED - SJ	REVISED -	
PLOT DATE = 7/1/2025	DATE - 07/01/2025	ISSUED FOR BID - 07/10/2025	

CDOT

CITY OF CHICAGO
DEPARTMENT OF TRANSPORTATION
49th WARD

PLAN AND PROFILE
PBC PROJECT NO #22926
W. GREENLEAF AVENUE - W. LUNT AVENUE
N. GLENWOOD AVENUE - N. SHERIDAN ROAD

OUC NUMBER	COUNTY	TOTAL SHEETS	SHEET NO.
OUC IR #123805	COOK	24	8
STA. TO STA.	SCALE: AS SHOWN		

PLAN: SURVEYED / PLOTTED / ALIGNMENT CHECKED / RT. OF WAY CHECKED / CADD FILE NAME / NOTE BOOK NO. / BY / DATE

PROFILE: SURVEYED / PLOTTED / GRADES CHECKED / B.M. NOTED / STRUCTURE NOTATNS CHKD / NOTE BOOK NO. / BY / DATE

MODEL: Default
FILE NAME: \\cnect-fs001\cnect-nas_2025_Projects\Green Alley\0_PBC Alley Revisions\2025\Package 6\CADD Drawings\23-CP37_W. Greenleaf Ave & N. Glenwood Ave\CADD Sheets\CP37-sht-pltprf-3.dgn

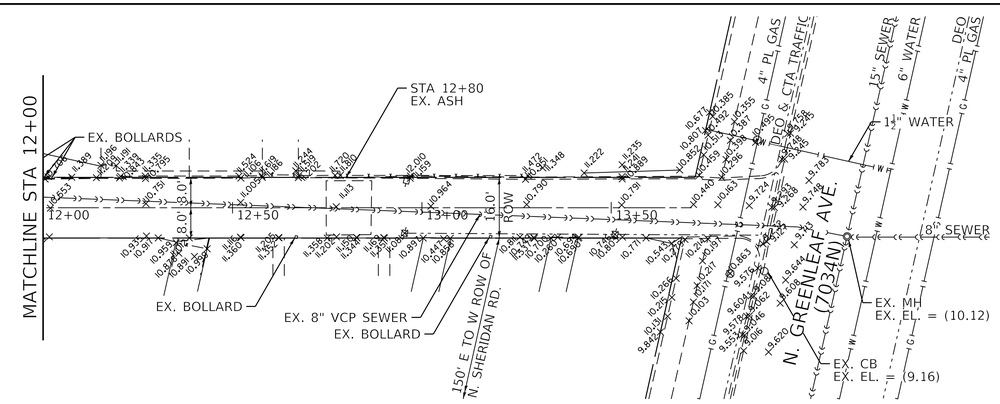

EXISTING CONDITIONS PLAN VIEW

0 20 40 60
SCALE IN FEET

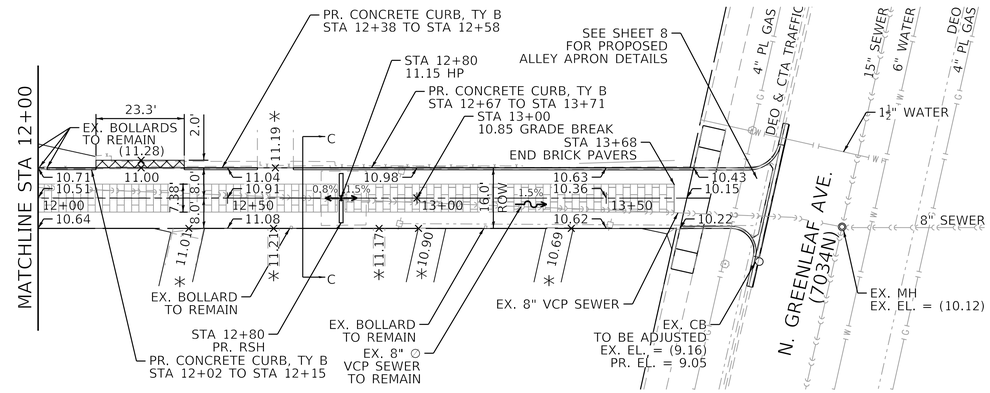

PROPOSED CONDITIONS PLAN VIEW

NOTES

1. ✳ MATCH EXISTING ELEVATIONS AT ALL PRIVATE ENTRANCES AND GATES.
2. PR ELEVATIONS SHOWN AT EOP ARE 0.33' INWARDS FROM EX ROW.

0 2 4 6
SCALE IN FEET

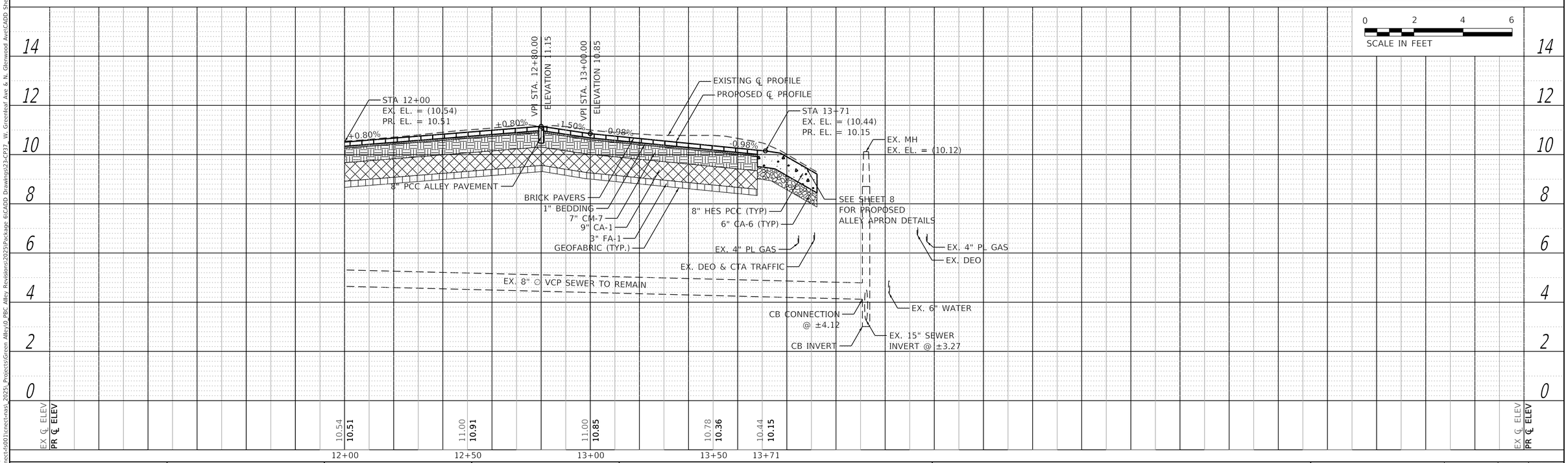

USER NAME = AB	DESIGNED - AP	REVISED -	
	DRAWN - AP	REVISED -	
PLOT SCALE = 20.0000 ' / in.	CHECKED - SJ	REVISED -	
PLOT DATE = 7/1/2025	DATE - 07/01/2025	ISSUED FOR BID - 07/10/2025	

CDOT

CITY OF CHICAGO
DEPARTMENT OF TRANSPORTATION
49th WARD

PLAN AND PROFILE
PBC PROJECT NO #22926
W. GREENLEAF AVENUE - W. LUNT AVENUE
N. GLENWOOD AVENUE - N. SHERIDAN ROAD

OUC NUMBER	COUNTY	TOTAL SHEETS	SHEET NO.
OUC IR #123805	COOK	24	9
STA. TO STA.	SCALE: AS SHOWN		

PLAN — SURVEYED / PLOTTED / ALIGNMENT CHECKED / RT. OF WAY CHECKED / CADD FILE NAME — NOTE BOOK NO. — BY — DATE

PROFILE — SURVEYED / PLOTTED / GRADES CHECKED / B.M. NOTED / STRUCTURE NOTATNS CHKD — NOTE BOOK NO. — BY — DATE

MODEL: Default
FILE NAME: \\cnect-fs001\cnect-nas_2025_Projects\Green Alley\0_PBC Alley Revisions\2025\Package 6\CADD Drawings\23-CP37_W. Greenleaf Ave & N. Glenwood Ave\CADD Sheets\CP37-sht-pltprf-4.dgn

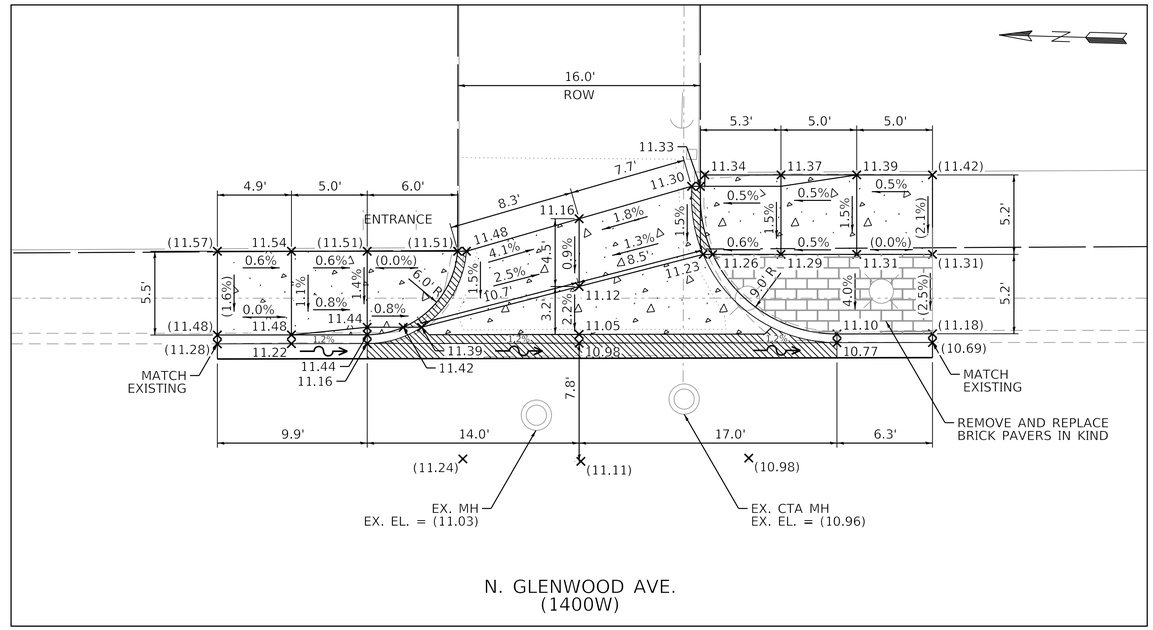

PROPOSED ALLEY APRON DETAILS

1" = 5'
NOTE: ALLEY RETURN WILL BE CONSTRUCTED IN PCC PAVEMENT.
USE HES PCC BASE COURSE AT T3 ALLEYS/DRIVEWAYS.

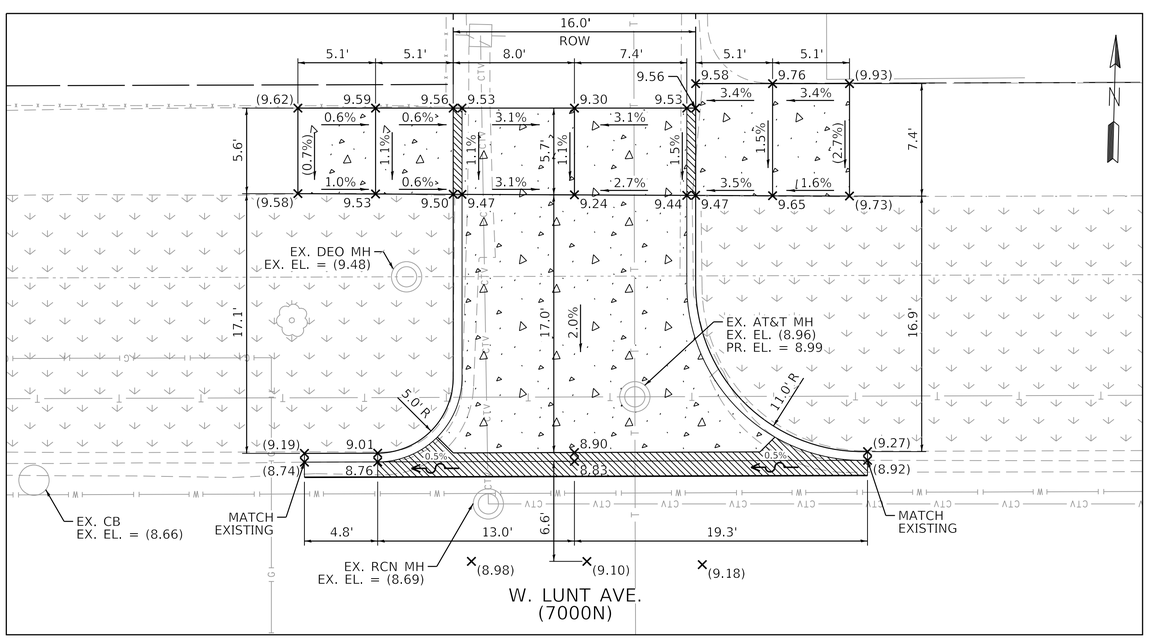

PROPOSED ALLEY APRON DETAILS

1" = 5'
NOTE: ALLEY RETURN WILL BE CONSTRUCTED IN PCC PAVEMENT.
USE HES PCC BASE COURSE AT T3 ALLEYS/DRIVEWAYS.

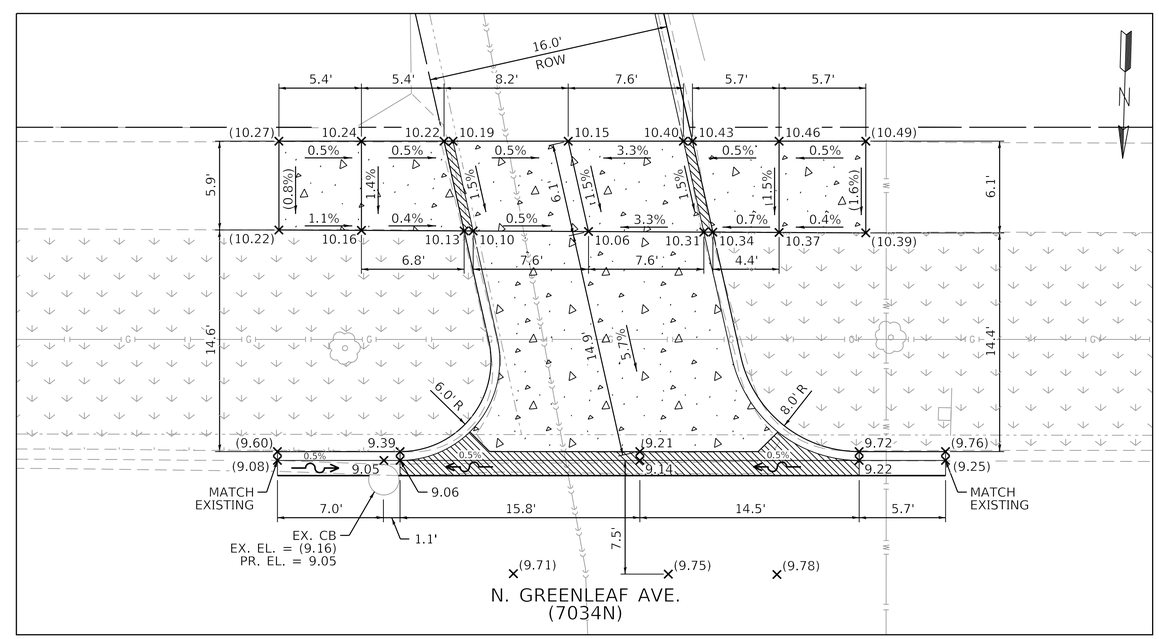

PROPOSED ALLEY APRON DETAILS

1" = 5'
NOTE: ALLEY RETURN WILL BE CONSTRUCTED IN PCC PAVEMENT.
USE HES PCC BASE COURSE AT T3 ALLEYS/DRIVEWAYS.

MODEL: Default
FILE NAME: \\cnect-fs001\cnect-nas\ 2025\ Projects\Green Alley\0 PBC Alley Revisions\2025\Package 6\CADD Drawings\23-CP37 W. Greenleaf Ave & N. Glenwood Ave\CADD Sheets\CP37-alt-typ-1.dgn

USER NAME = AB	DESIGNED - AP	REVISED -	
	DRAWN - AP	REVISED -	
PLOT SCALE = 5.0000 ' / in.	CHECKED - SJ	REVISED -	
PLOT DATE = 7/1/2025	DATE - 07/01/2025	ISSUED FOR BID - 07/10/2025	

CITY OF CHICAGO
DEPARTMENT OF TRANSPORTATION
49th WARD

ALLEY APRON DETAILS
PBC PROJECT NO #22926
W. GREENLEAF AVENUE - W. LUNT AVENUE
N. GLENWOOD AVENUE - N. SHERIDAN ROAD

OUC NUMBER	COUNTY	TOTAL SHEETS	SHEET NO.
OUC IR #123805	COOK	24	10
STA. TO STA.	SCALE: AS SHOWN		

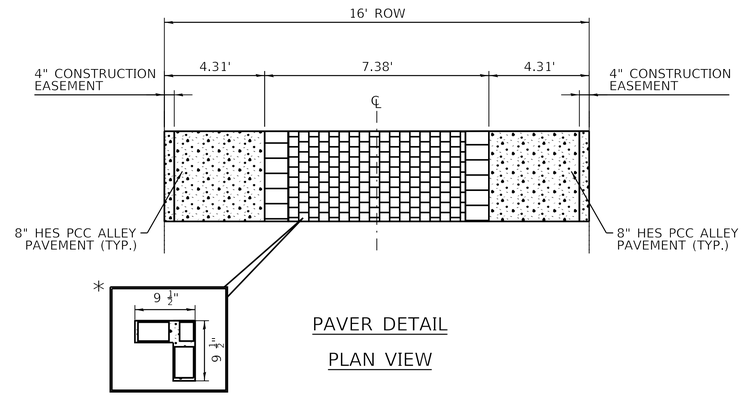

PAVER DETAIL

PLAN VIEW

NOTE:

1. ALL DIMENSIONS ARE BASED ON UNILOCK DATA. CONTRACTOR IS TO FIELD VERIFY DIMENSIONS AND TEST LAYOUT PRIOR TO COLLAR CONSTRUCTION.
   * INDIVIDUAL PREFABRICATED "L"SHAPED UNILOCK PAVER.
2. GEOTEXTILE FABRIC SHOULD BE A WOVEN MATERIAL. ALL CA-1, CA-6, AND CM-7 MATERIALS SHOULD BE WASHED AND FREE OF FILES TO PRESERVE INFILTRATION CAPACITY.
3. MAXIMUM GAP SIZE BETWEEN BRICK PAVER AND 8" PCC HES PAVEMENT IS ½".
4. 0.33' FILL OR PCC WILL BE PAID AS ALLEY PAVEMENT.

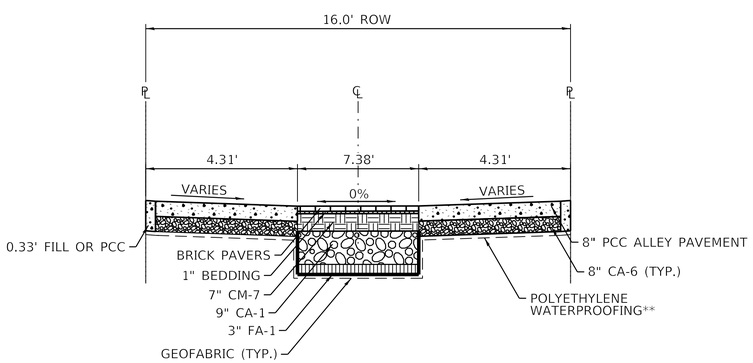

PROPOSED TYPICAL CROSS SECTION A-A

STA. 0+00 TO STA. 4+60
STA. 10+00 TO STA. 11+83

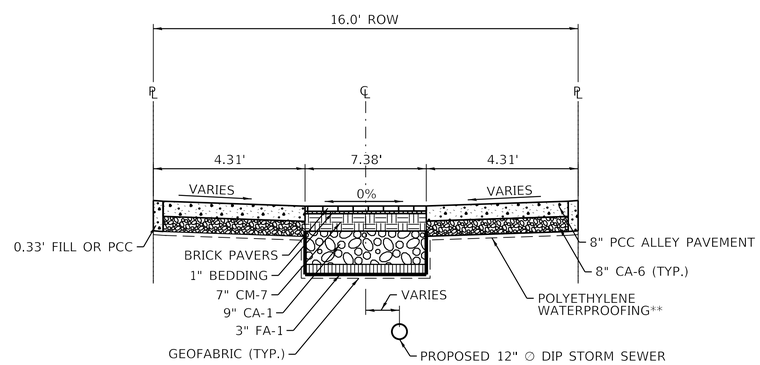

PROPOSED TYPICAL CROSS SECTION B-B

STA. 4+60 TO STA. 7+17

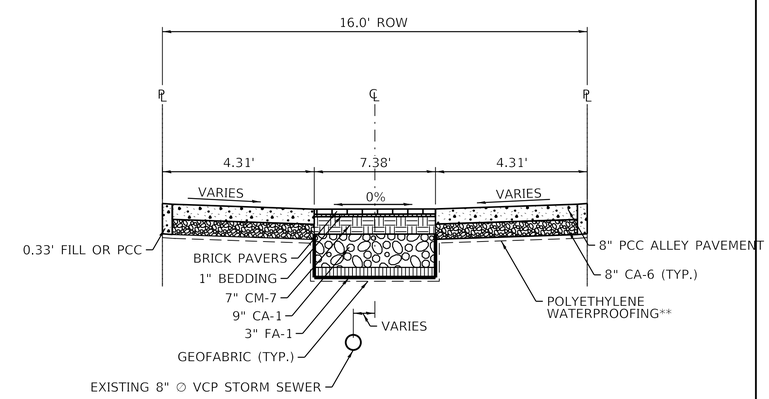

PROPOSED TYPICAL CROSS SECTION C-C

STA 11+83 TO STA 13+71

NOTE:

** POLYETHYLENE WATERPROOFING LINER IS REQUIRED WHEN PAVER SECTION OF ALLEY IS ADJACENT TO BUILDING FOUNDATION

NOTE: 0.33' FILL OR PCC WILL BE PAID FOR AS 8" ALLEY PAVEMENT, CA-6, OR PULVERIZED TOPSOIL MIX W/ HYDROSEED.

MODEL: Default
FILE NAME: \\cnect-fs001\cnect-nas_2025_Projects\Green Alley\0 PBC Alley Revisions\2025\Package 6\CADD Drawings\23-CP37_W. Greenleaf Ave & N. Glenwood Ave\CADD Sheets\CP37-sht-typ2.dgn

CDOT

USER NAME = AB	DESIGNED - AP	REVISED -	
	DRAWN - AP	REVISED -	
PLOT SCALE = 5.0000 ' / in.	CHECKED - SJ	REVISED -	
PLOT DATE = 7/1/2025	DATE - 07/01/2025	REVISED - 07/10/2025	

CITY OF CHICAGO
DEPARTMENT OF TRANSPORTATION
49th WARD

TYPICAL SECTIONS
PBC PROJECT NO #22926
W. GREENLEAF AVENUE - W. LUNT AVENUE
N. GLENWOOD AVENUE - N. SHERIDAN ROAD

OUC NUMBER	COUNTY	TOTAL SHEETS	SHEET NO.
OUC IR #123805	COOK	24	11
	SCALE: NTS		

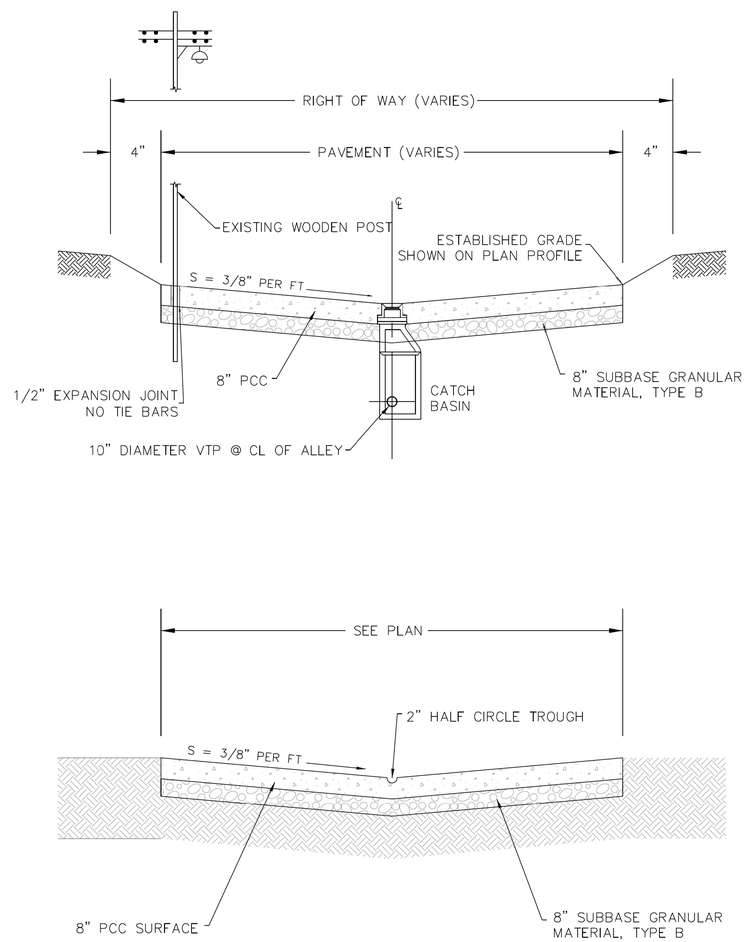

DATE	REVISION	CITY OF CHICAGO		
1/1/2014	REVISION 1	STANDARD ALLEY SECTION		
9/30/2024	REVISION 2			
		DATE	SHEET	DRAWN BY
		12/12/06	A-1-2	CDOT

CDOT
CHICAGO DEPARTMENT OF TRANSPORTATION

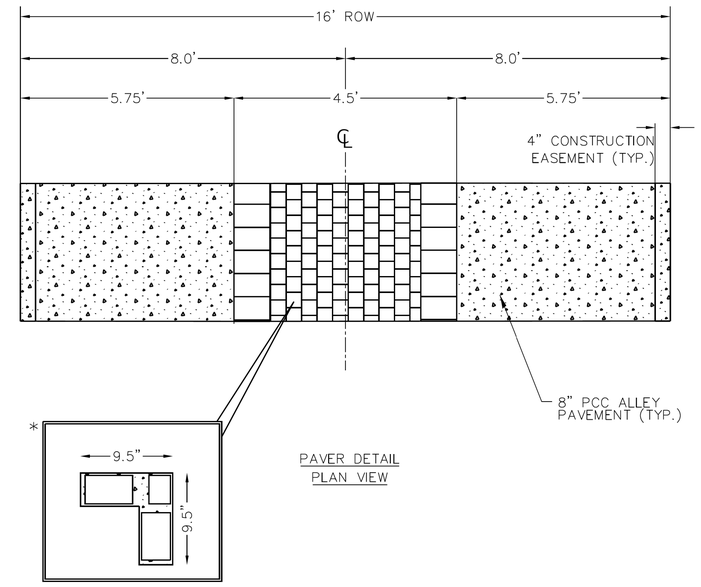

NOTE:

1. ALL DIMENSIONS ARE BASED ON UNILOCK DATA. CONTRACTOR IS TO FIELD VERIFY DIMENSIONS AND TEST LAYOUT PRIOR TO COLLAR CONSTRUCTION.
* INDIVIDUAL PREFABRICATED "L" SHAPED UNILOCK PAVER.
2. GEOTEXTILE FABRIC SHOULD BE A WOVEN MATERIAL. ALL CA-1, CA-6, AND CM-7 MATERIALS SHOULD BE WASHED AND FREE OF FINES TO PRESERVE INFILTRATION CAPACITY.
3. MAXIMUM GAP SIZE BETWEEN BRICK PAVER AND 8" PCC HES PAVEMENT IS ½".
4. STANDARD IS TO BE USED FOR 16' ROW, IN CASES WHERE ROW IS NOT 16', WIDTH OF PAVERS IS TO THE DISRECTION OF THE ENGINEER.
** POLYETHYLENE WATERPROOFING LINER IS REQUIRED WHEN PAVER SECTION OF ALLEY IS ADJACENT TO BUILDING FOUNDATION.
5. LENGTH OF PERVIOUS SECTION TO BE DETERMINED BY STORM WATER BULLETIN 75 5 YEAR RAINFALL DATA.
6. CALCULATIONS FOR STORMWATER STORAGE REQUIREMENTS BASED ON 2016 STORMWATER REGULATIONS.

DATE	REVISION	CITY OF CHICAGO		
		STANDARD ALLEY SECTION		
		DATE	SHEET	DRAWN BY
		1/23/24	A-1-2-c	CDOT

CDOT
CHICAGO DEPARTMENT OF TRANSPORTATION

MODEL: Default
FILE NAME: \\cnect-s001\cnect-nas\ 2025\ Projects\Green Alley\0 PBC Alley Revisions\2023\Package 6\CADD Drawings\23-CP37 W. Greenleaf Ave & N. Glenwood Ave\CADD Sheets\CP37-cdot-c-dgn-1.dgn

USER NAME = AB	DESIGNED -	REVISED -	
	DRAWN -	REVISED -	
PLOT SCALE = 10.0000 ' / in.	CHECKED -	REVISED -	
PLOT DATE = 7/1/2025	DATE - 07/01/2025	REVISED - 07/10/2025	

CITY OF CHICAGO
DEPARTMENT OF TRANSPORTATION
49th WARD

CDOT STANDARD CONSTRUCTION DETAILS
PBC PROJECT NO #22926
W. GREENLEAF AVENUE - W. LUNT AVENUE
N. GLENWOOD AVENUE - N. SHERIDAN ROAD

OUC NUMBER	COUNTY	TOTAL SHEETS	SHEET NO.
OUC IR #123805	COOK	24	12
	SCALE: NTS		

NOTE: H = VARIABLE 3" TO 9"
X = THICKNESS OF PAVEMENT
Y = ONE HALF THE THICKNESS OF CONCRETE PAVEMENT OR CONCRETE BASE.
Z = 10" OR THICKNESS OF PAVEMENT – WHICHEVER IS GREATER

TYPE BV. 12 OR TYPE 3 CURB & GUTTER

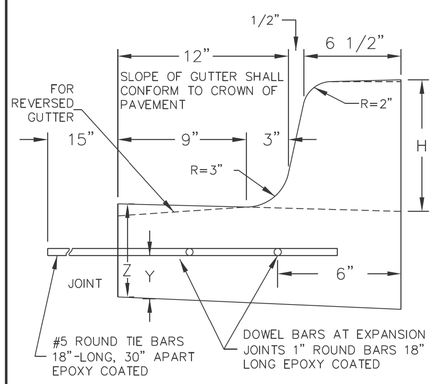

TYPE B OR TYPE 4 CURB BARRIER CURB

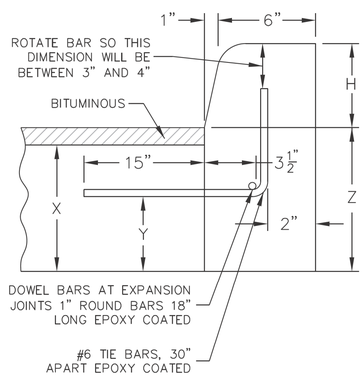

JOINTS IN CURB, COMBINED CURB & GUTTER

TRANSVERSE JOINTS OF A TYPE SIMILAR TO THAT USED IN THE ADJACENT PAVEMENT SHALL BE INSTALLED IN THE CURB, GUTTER AND COMBINED CURB & GUTTER IN PROLONGATION WITH THE JOINTS IN THE PAVEMENT. THE DETAILS OF THE TRANSVERSE JOINTS IN THE CURB, GUTTER AND COMBINED CURB & GUTTER SHALL BE APPROVED BY THE COMMISSIONER. CURB, GUTTER OR COMBINED CURB & GUTTER IS CONSTRUCTED ADJACENT TO A FLEXIBLE BASE PAVEMENT, 1" THICK EXPANSION JOINTS COMPOSED OF BITUMINOUS PERFORMED JOINT FILLER SHALL BE INSTALLED IN THE CURB AND/OR GUTTER AT POINTS OF CURVATURE AND AT CONSTRUCTION JOINTS. CONTRACTION JOINTS SHALL ALSO BE PLACED BETWEEN THESE EXPANSION JOINTS AT DISTANCES NOT EXCEEDING 20 FEET. ALL TIE BARS SHALL BE DEFORMED–ALL DOWEL BARS SHALL BE SMOOTH.

NOTE: ALL TIE BARS AND DOWEL BARS TO BE EPOXY COATED.

*AT LOCATIONS REQUIRING DEPRESSED CURBS SEE THE ADA STANDARDS FOR CONSTRUCTION DETAILS

CDOT CHICAGO DEPARTMENT OF TRANSPORTATION	DATE	REVISION	CITY OF CHICAGO		
	1/1/2014	REVISION 1	CONCRETE CURB & GUTTER DETAIL		
			DATE	SHEET	DRAWN BY
			12/12/06	A-2-6	CDOT

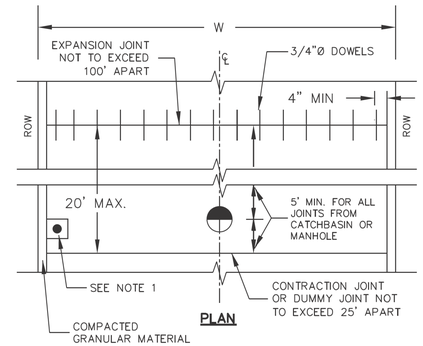

PLAN

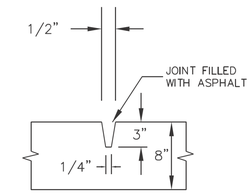

DUMMY GROOVE CONTRACTION JOINT
TRANSVERSE ONLY

NOTE 1:
1. 1/2" EXPANSION JOINT WITHOUT DOWELS WITH BITUMINOUS PREFORMED JOINT FILLER TO BE PLACED THREE (3") INCHES FROM THREE SIDES OF STRUCTURES OR AS DIRECTED BY THE COMMISSIONER.

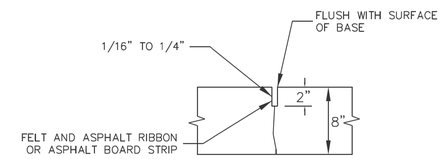

PREMOLDED CONTRACTION JOINT
TRANSVERSE ONLY

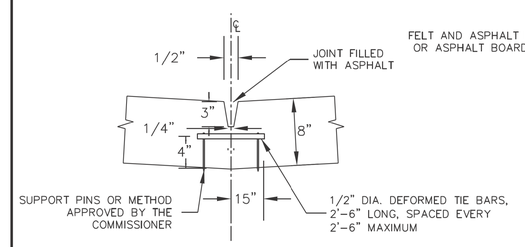

LONGITUDINAL CONSTRUCTION JOINT
REQUIRED FOR W 18' OR MORE

NOTES:
1. DEFORMED TIE BARS SHALL CONFORM TO THE REQUIREMENTS OF THE IDOT SSRBC.
2. HOT POURED JOINT MATERIAL SHALL CONFORM TO THE REQUIREMENTS OF THE IDOT SSRBC.
3. ALL TIE BARS AND DOWEL BARS ARE TO BE EPOXY COATED.

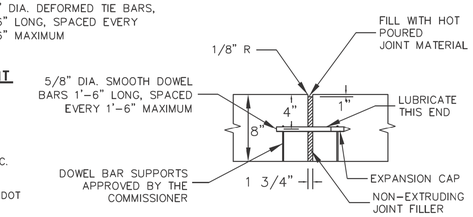

TRAVERSE EXPANSION JOINT
(MAY BE CONSTRUCTION JOINT)

CDOT CHICAGO DEPARTMENT OF TRANSPORTATION	DATE	REVISION	CITY OF CHICAGO		
	1/1/2014	REVISION 1	PORTLAND CEMENT CONCRETE ALLEY		
			DATE	SHEET	DRAWN BY
			12/21/06	A-2-9	CDOT

MODEL: Default
FILE NAME: \\cnect-fs001\cnect-nas_2025_Projects\Green Alley\0 PBC Alley Revisions\2025\Package 6\CADD Drawings\23-CP37 W. Greenleaf Ave & N. Glenwood Ave\CADD Sheets\CP37-cdot-2.dgn

USER NAME = AB	DESIGNED -	REVISED -	
	DRAWN -	REVISED -	
PLOT SCALE = 10.0000 ' / in.	CHECKED -	REVISED -	
PLOT DATE = 7/1/2025	DATE - 07/01/2025	REVISED - 07/10/2025	

CITY OF CHICAGO
DEPARTMENT OF TRANSPORTATION
49th WARD

CDOT STANDARD CONSTRUCTION DETAILS
PBC PROJECT NO #22926
W. GREENLEAF AVENUE - W. LUNT AVENUE
N. GLENWOOD AVENUE - N. SHERIDAN ROAD

OUC NUMBER	COUNTY	TOTAL SHEETS	SHEET NO.
OUC IR #123805	COOK	24	13
	SCALE: NTS		

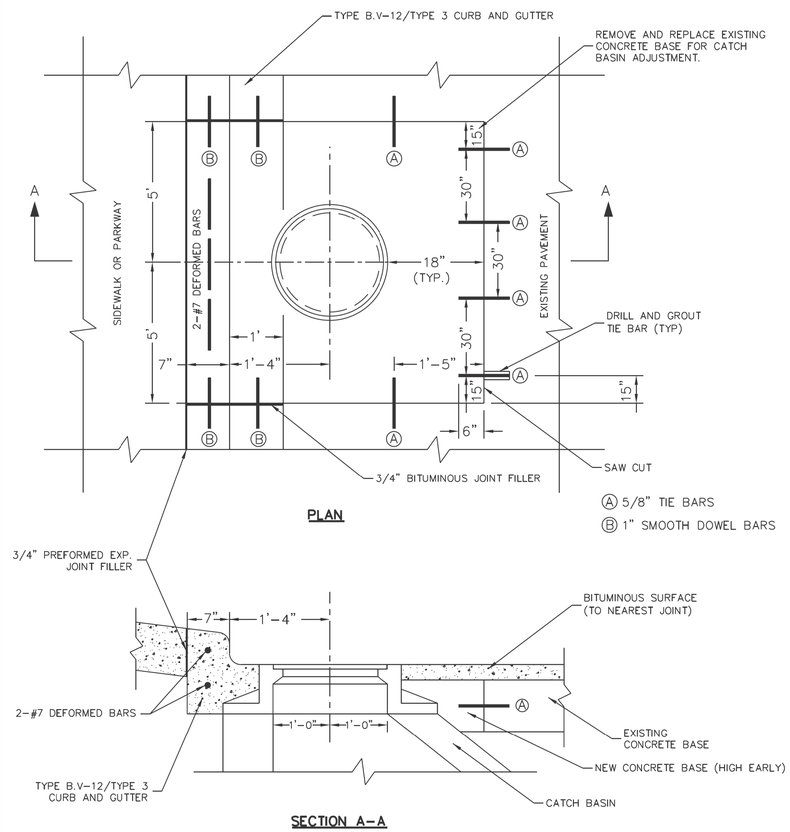

DATE	REVISION	CITY OF CHICAGO		
1/1/2014	REVISION 1	CATCH BASIN ADJUSTMENT IN EXISTING PAVEMENT		
		DATE	SHEET	DRAWN BY
		12/22/06	A-2-11	CDOT

CDOT CHICAGO DEPARTMENT OF TRANSPORTATION

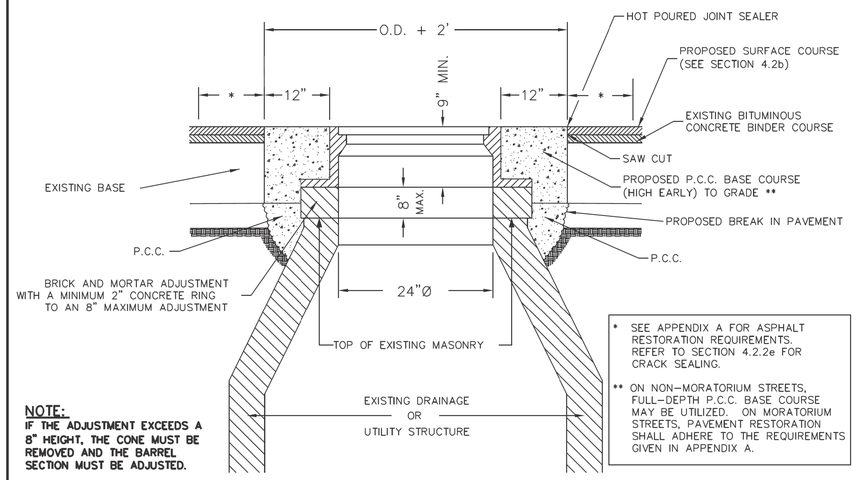

* SEE APPENDIX A FOR ASPHALT RESTORATION REQUIREMENTS. REFER TO SECTION 4.2.2e FOR CRACK SEALING.

** ON NON-MORATORIUM STREETS, FULL-DEPTH P.C.C. BASE COURSE MAY BE UTILIZED. ON MORATORIUM STREETS, PAVEMENT RESTORATION SHALL ADHERE TO THE REQUIREMENTS GIVEN IN APPENDIX A.

NOTE:
IF THE ADJUSTMENT EXCEEDS A 8" HEIGHT, THE CONE MUST BE REMOVED AND THE BARREL SECTION MUST BE ADJUSTED.

PLAN VIEW (BASE TO GRADE)

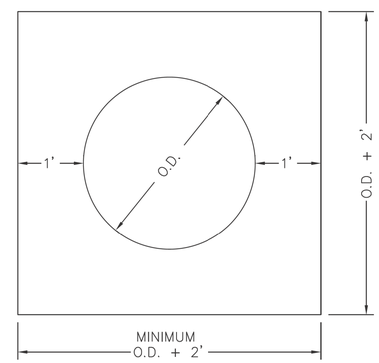

MANHOLE COVER FRONT VIEW

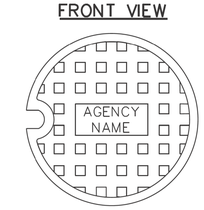

DATE	REVISION	CITY OF CHICAGO		
1/1/2014	REVISION 1	FRAME ADJUSTMENT IN PAVEMENT		
1/27/2016	REVISION 2			
10/18/2019	REVISION 3	DATE	SHEET	DRAWN BY
		12/22/06	A-2-12	CDOT

CDOT CHICAGO DEPARTMENT OF TRANSPORTATION

MODEL: Default
FILE NAME: \\cnect-fs001\cnect-nas\ 2025\ Projects\Green Alley\0 PBC Alley Revisions\2025\Package 6\CADD Drawings\23-CP37 W. Greenleaf Ave. & N. Glenwood Ave\CADD Sheets\CP37-sht-cdds-3.dgn

USER NAME = AB	DESIGNED -	REVISED -	CITY OF CHICAGO DEPARTMENT OF TRANSPORTATION 49th WARD
	DRAWN -	REVISED -	
PLOT SCALE = 10.0000 ' / in.	CHECKED -	REVISED -	
PLOT DATE = 7/1/2025	DATE - 07/01/2025	REVISED - 07/10/2025	

CDOT STANDARD CONSTRUCTION DETAILS
PBC PROJECT NO #22926
W. GREENLEAF AVENUE - W. LUNT AVENUE
N. GLENWOOD AVENUE - N. SHERIDAN ROAD

OUC NUMBER	COUNTY	TOTAL SHEETS	SHEET NO.
OUC IR #123805	COOK	24	14
	SCALE: NTS		

NOTES:

A. DETECTABLE WARNING IS NOT REQUIRED AT ALLEY RETURNS.

B. RAMP DETAILS ARE DEPENDENT UPON SITE SPECIFIC CONDITIONS (WHERE RAMPS ARE NECESSARY). SEE APPROPRIATE RAMP SHEET AS REQUIRED (TYP.).

C. SEE DETAIL B-2-5 FOR REDUCED WIDTH (4' MIN.) PEDESTRIAN ACCESSIBLE ROUTE ACROSS ALLEY / DRIVEWAY (TO ALLOW FOR ADDITIONAL SLOPE AT ALLEY / DRIVEWAY).

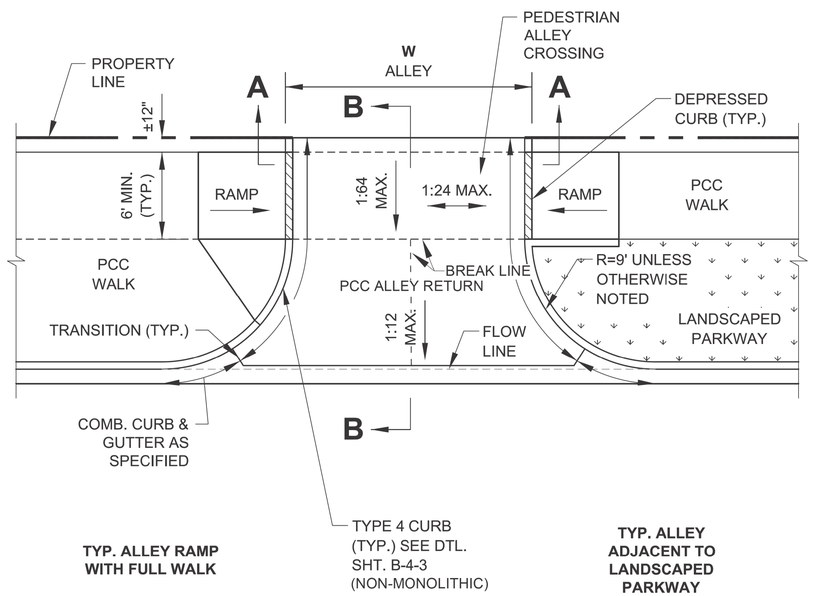

PLAN VIEW

NOTE:
WORK THIS SHEET WITH SHEET B-2-2.

City of Chicago
Rahm Emanuel, Mayor
Department of Transportation
Division of Engineering
www.cityofchicago.org

CDOT CHICAGO DEPARTMENT OF TRANSPORTATION

DATE	REVISION
02/20/07	REVISION 1
11/15/07	REVISION 2
11/14/08	REVISION 3
11/02/09	REVISION 4
08/10/12	REVISION 5
01/01/14	REVISION 6

CITY OF CHICAGO
ALLEY RETURN PLAN VIEW
SHEET B-2-1

SCALE: NOT TO SCALE
DATE: 10/23/2006

DRAWN BY: CDOT
CHECKED BY: GK

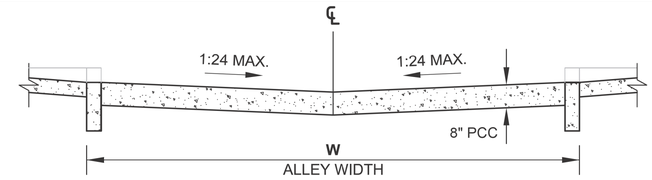

SECTION A-A: CROSS SECTION AT PROPERTY LINE

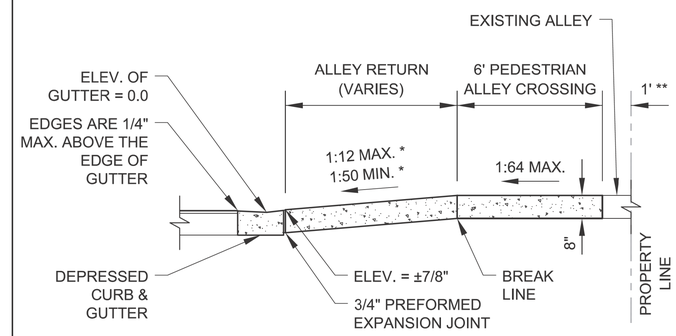

SECTION B-B: LONGITUDINAL SECTION SHOWING DEPRESSED CURB & GUTTER

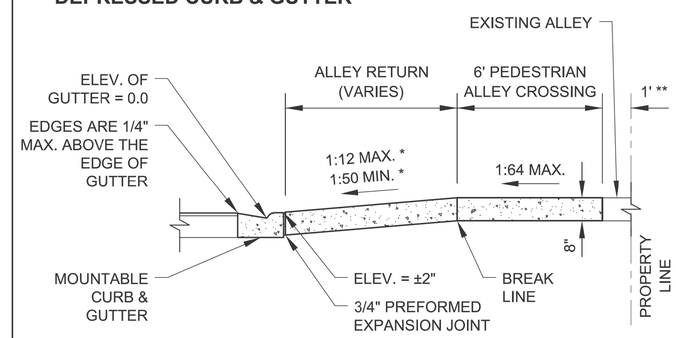

SECTION B-B: LONGITUDINAL SECTION SHOWING MOUNTABLE CURB & GUTTER

ALLEY RETURN NOTES:

A. WHEN A PORTION OF AN EXISTING PAVED ALLEY IS REMOVED TO ADJUST THE ALLEY PAVEMENT TO THE NEW GRADE, 3/4" PREFORMED EXPANSION JOINT MATERIAL SHALL BE PLACED ON THE PROPERTY LINE OTHERWISE THE JOINT IS OMITTED. THE COST OF FURNISHING AND PLACING THE 3/4" PREFORMED EXPANSION JOINT MATERIAL SHALL BE INCLUDED IN THE COST OF THE PORTLAND CEMENT CONCRETE ALLEY RETURN.

B. SAWED JOINTS SHALL BE SEALED WITH A POURED MATERIAL MEETING THE REQUIREMENTS OF SECTION 1050 OF THE SSRBC.

* SLOPE VARIES AND IS NOT GOVERNED BY ADA

** THE SLOPE OF THE ALLEY IN THE 1' SPACE ADJACENT TO THE PROPERTY LINE MAY BE ALTERED UP TO 10% TO MEET EXISTING CONDITIONS

NOTE:
WORK THIS SHEET WITH SHEET B-2-1.

City of Chicago
Rahm Emanuel, Mayor
Department of Transportation
Division of Engineering
www.cityofchicago.org

CDOT CHICAGO DEPARTMENT OF TRANSPORTATION

DATE	REVISION
02/20/07	REVISION 1
11/15/07	REVISION 2
11/14/08	REVISION 3
11/02/09	REVISION 4
08/10/12	REVISION 5
01/01/14	REVISION 6

CITY OF CHICAGO
ALLEY RETURN SECTIONS
SHEET B-2-2

SCALE: NOT TO SCALE
DATE: 10/23/2006

DRAWN BY: CDOT
CHECKED BY: GK

MODEL: Default
FILE NAME: \\cnect-fs001\cnect-nas\ 2025\ Projects\Green Alley\0 PBC Alley Revisions\2025\Package 6\CADD Drawings\23-CP37 W. Greenleaf Ave & N. Glenwood Ave\CADD Sheets\CP37-cdot-4.dgn

CDOT

USER NAME = AB	DESIGNED -	REVISED -	
	DRAWN -	REVISED -	
PLOT SCALE = 10.0000 ' / in.	CHECKED -	REVISED -	
PLOT DATE = 7/1/2025	DATE - 07/01/2025	REVISED - 07/10/2025	

CITY OF CHICAGO
DEPARTMENT OF TRANSPORTATION
49th WARD

CDOT STANDARD CONSTRUCTION DETAILS
PBC PROJECT NO #22926
W. GREENLEAF AVENUE - W. LUNT AVENUE
N. GLENWOOD AVENUE - N. SHERIDAN ROAD

OUC NUMBER	COUNTY	TOTAL SHEETS	SHEET NO.
OUC IR #123805	COOK	24	15
	SCALE: NTS		

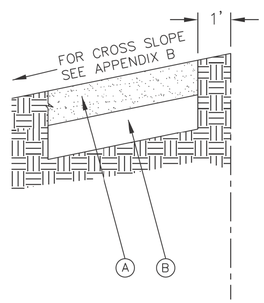

LEGEND:

(A) PROPOSED 5" P.C.C. SIDEWALK *

(B) SUBBASE GRANULAR MATERIAL, TYPE B OR C, 4"

* CURB RAMP & KEYSTONE 8" P.C.C. AT SIGNALIZED AND INDUSTRIAL STREET INTERSECTIONS

CDOT CHICAGO DEPARTMENT OF TRANSPORTATION	DATE	REVISION	CITY OF CHICAGO		
	1/1/2014	REVISION 1	ADA COMPLIANT SIDEWALK CONSTRUCTION DETAILS		
			DATE	SHEET	DRAWN BY
			12/20/06	A-3-1	CDOT

ADA COMPLIANCE AND TRANSITION GUIDELINES

POLICY STATEMENT: ANY ALTERATION OF THE PUBLIC WAY MUST BE RESTORED IN AN ADA COMPLIANT MANNER

I. STREET/ALLEY RESTORATION

FOR ANY PROJECT WHERE, WITHIN THE PROJECT LIMITS, A CROSSWALK IS ENCOUNTERED OR WHERE THE PROJECT LIMITS TERMINATE WITHIN 4' OR LESS OF A CROSSWALK, THOSE CROSSWALKS AND THE ASSOCIATED CURB RAMPS MUST BE IMPROVED TO CURRENT ADA STANDARDS IF THEY ARE NOT COMPLIANT (SEE APPENDIX A.)

WHEN A PROJECT CALLS FOR ONLY AN INTERSECTION TO BE REPAVED, THE INTERSECTION LIMITS AS DEFINED BY THE AREA OUTLINED BY OUTERMOST CROSSWALK LINES AND ADJACENT CURB FACES AND ALL ADJOINING CROSSWALKS AND CURB RAMPS MUST BE IMPROVED TO CURRENT ADA STANDARDS IF THEY ARE NOT COMPLIANT (SEE APPENDIX A).

WHEN WORK IS LIMITED TO A SINGLE CORNER OF AN INTERSECTION, THE CURB RAMP MUST BE IMPROVED TO CURRENT ADA STANDARDS AND THE ADJACENT PAVEMENT MUST BE RESURFACED, AS NECESSARY TO PROVIDE FOR A FLUSH TRANSITION (SEE APPENDIX A).

WHEN ADA WORK IS LIMITED TO A SINGLE CORNER OF AN INTERSECTION, THE ADJACENT PAVEMENT MUST BE RESTORED (SEE APPENDIX A).

FOR ANY CONSTRUCTION WHERE, WITHIN THE PROJECT LIMITS, AN ALLEY APRON IS ENCOUNTERED, THE ASSOCIATED CURB RAMPS, ALLEY APRON, AND SIDEWALKS MUST BE IMPROVED TO CURRENT ADA STANDARDS IF THEY ARE NOT COMPLIANT (SEE APPENDIX A).

II. SIDEWALK INSTALLATION / REPAIRS / RECONSTRUCTION

THE LIMITS OF ANY MAINLINE SIDEWALK REPLACEMENT, GREATER THAN TEN FEET (10') IN LENGTH, THAT ABUT AN EXISTING RAMP, KEYSTONE, TRANSITION PANEL, AND/OR LANDING AREA (THIS TOTAL LENGTH INCLUDES THE PRIOR ELEMENTS), SHALL BE EXTENDED TO INCLUDE THE AFFECTED RAMPS AND THESE RAMPS SHALL BE RECONSTRUCTED TO CURRENT ADA STANDARDS. IN ADDITION, ALL NEWLY PLACED SIDEWALK TEN FEET (10') OR MORE IN LENGTH SHALL BE CONSTRUCTED IN ACCORDANCE WITH ALL CURRENT APPLICABLE STANDARDS WHICH INCLUDE PROVIDING A MINIMUM FOUR FEET (4') WIDTH ACCESSIBLE PATHWAY WITH A CROSS SLOPE NOT TO EXCEED 1:64 (SEE APPENDIX A).

III. GUIDELINES FOR TRANSITIONING TO EXISTING NON-COMPLIANT CONDITION

NEW SIDEWALK PLACEMENTS GREATER THAN TEN FEET IN CONTIGUOUS LENGTH:

THE LIMITS OF ANY MAINLINE SIDEWALK REPLACEMENT, GREATER THAN TEN FEET (10') IN LENGTH, MUST BE EXTENDED FOR A MINIMUM FIVE ADDITIONAL FEET (5') EITHER SIDE IN ORDER TO PROVIDE A TRANSITION TO MATCH THE EXISTING SIDEWALK. THE LENGTH OF TRANSITION SHALL BE LENGTHENED AS NECESSARY TO ENSURE THAT THE RUNNING SLOPE OF THE TRANSITION DOES NOT EXCEED A SLOPE OF 1:24 (PREFERRED) OR 1:14 (MAXIMUM) AT ANY POINT.

NEW SIDEWALK REPLACEMENTS TEN FEET OR LESS IN CONTIGUOUS LENGTH (REPAIRS):

IT IS ACCEPTABLE PRACTICE TO MATCH ADJACENT SIDEWALKS AT THE EXISTING SLOPE.

CURB RAMP REPLACEMENTS

WHEN REPLACING AN ADA RAMP, THE SIDEWALK REPLACEMENT MUST EXTEND BEYOND THE LIMITS OF THE LANDING AREA AND/OR THE "KEYSTONE" A MINIMUM OF AN ADDITIONAL FIVE FEET (5') ON EITHER SIDE IN ORDER TO PROVIDE A TRANSITION TO MATCH THE EXISTING SIDEWALK. THE TRANSITION PANEL SHALL BE LENGTHENED AS NECESSARY TO ENSURE THAT THE RUNNING SLOPE OF THE TRANSITION PANEL DOES NOT EXCEED A SLOPE OF 1:24 (PREFERRED) OR 1:14 (MAXIMUM) AT ANY POINT.

NO EXCEPTIONS TO THE ABOVE WILL BE ALLOWED WITHOUT WRITTEN APPROVAL FROM THE COMMISSIONER.

City of Chicago Rahm Emanuel, Mayor Department of Transportation Division of Engineering www.cityofchicago.org	DATE	REVISION	CITY OF CHICAGO ADA COMPLIANCE AND TRANSITION GUIDELINES SHEET B-3-4	
	02/20/07	REVISION 1		
	11/15/07	REVISION 2		
	11/14/08	REVISION 3		
	11/02/09	REVISION 4		
	08/10/12	REVISION 5	SCALE: NOT TO SCALE	DRAWN BY: CDOT
	01/01/14	REVISION 6	DATE: 10/23/2006	CHECKED BY: GK

MODEL: Default
FILE NAME: \\cnect-fs001\cnect-nas\ 2025\ Projects\Green Alley\0 PBC Alley Revisions\2025\Package 6\CADD Drawings\23-CP37 W. Greenleaf Ave & N. Glenwood Ave\CADD Sheets\CP37-sht-cdot-5.dgn

USER NAME = AB	DESIGNED -	REVISED -	CITY OF CHICAGO DEPARTMENT OF TRANSPORTATION 49th WARD	CDOT STANDARD CONSTRUCTION DETAILS PBC PROJECT NO #22926 W. GREENLEAF AVENUE - W. LUNT AVENUE N. GLENWOOD AVENUE - N. SHERIDAN ROAD	OUC NUMBER / COUNTY / TOTAL SHEETS / SHEET NO.
	DRAWN -	REVISED -			OUC IR #123805 / COOK / 24 / 16
PLOT SCALE = 10.0000 ' / in.	CHECKED -	REVISED -			SCALE: NTS
PLOT DATE = 7/1/2025	DATE - 07/01/2025	REVISED - 07/10/2025			

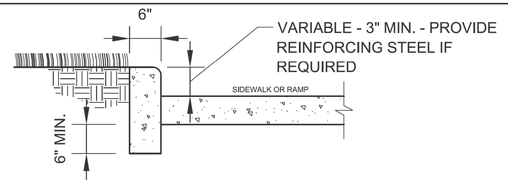

SIDE CURB - SECTION

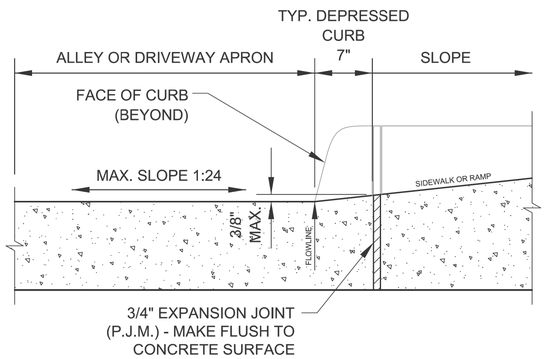

DEPRESSED CURB & GUTTER
AT ALLEY/DRIVEWAY APRON (TYPE 4 OR B CURB)

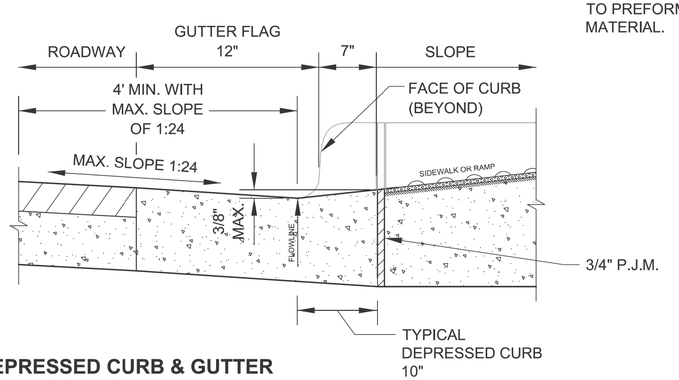

DEPRESSED CURB & GUTTER
AT BOTTOM OF TYPICAL CURB RAMP

NOTES FOR CURB & GUTTER DETAILS THIS SHEET:

A. CROSS SLOPE AT DEPRESSED CURB & GUTTER NOT TO EXCEED 1:64.

B. DETECTABLE WARNING SURFACE AT DRIVEWAYS REQUIRED ONLY FOR COMMERCIAL DRIVEWAYS WITH TRAFFIC CONTROL DEVICES, I.E. SIGNALS.

C. REFER TO *REGULATIONS FOR OPENINGS, CONSTRUCTION AND REPAIR IN THE PUBLIC WAY (CDOT)* FOR ADDITIONAL REQUIREMENTS FOR CURB AND GUTTER INSTALLATION.

D. RAMP SIDE FLARES SHALL BE INSTALLED AT ANY LOCATION WHERE THE SURFACE ADJACENT TO THE RAMP SURFACE IS INTENDED FOR PEDESTRIAN USE. TRIPPING HAZARDS, INCLUDING STEPS, DROP-OFFS, OR SIDE CURBS SHALL NOT BE LOCATED WITHIN THE LIMITS OF THE SIDEWALK.

E. 'P.J.M.' THIS SHEET REFERS TO PREFORMED JOINT MATERIAL.

City of Chicago
Rahm Emanuel, Mayor
Department of Transportation
Division of Engineering
www.cityofchicago.org

CDOT
CHICAGO DEPARTMENT OF TRANSPORTATION

DATE	REVISION
02/20/07	REVISION 1
11/15/07	REVISION 2
11/14/08	REVISION 3
11/02/09	REVISION 4
08/10/12	REVISION 5

CITY OF CHICAGO
CURB & GUTTER DETAILS
SHEET B-4-3

SCALE: NOT TO SCALE
DATE: 10/23/2006

DRAWN BY: CDOT
CHECKED BY: LCM

MODEL: Default
FILE NAME: \\cnect-fs001\cnect-nas\ 2025\ Projects\Green Alley\0 PBC Alley Revisions\2025\Package 6\CADD Drawings\23-CP37 W. Greenleaf Ave & N. Glenwood Ave\CADD Sheets\CP37-cdot-6.dgn

CDOT

USER NAME = AB	DESIGNED -	REVISED -	
	DRAWN -	REVISED -	
PLOT SCALE = 10.0000 ' / in.	CHECKED -	REVISED -	
PLOT DATE = 7/1/2025	DATE - 07/01/2025	REVISED - 07/10/2025	

CITY OF CHICAGO
DEPARTMENT OF TRANSPORTATION
49th WARD

CDOT STANDARD CONSTRUCTION DETAILS
PBC PROJECT NO #22926
W. GREENLEAF AVENUE - W. LUNT AVENUE
N. GLENWOOD AVENUE - N. SHERIDAN ROAD

OUC NUMBER	COUNTY	TOTAL SHEETS	SHEET NO.
OUC IR #123805	COOK	24	17
	SCALE: NTS		

SPECIAL DRAINAGE STRUCTURES
FOR PUBLIC STREETS AND ALLEYS

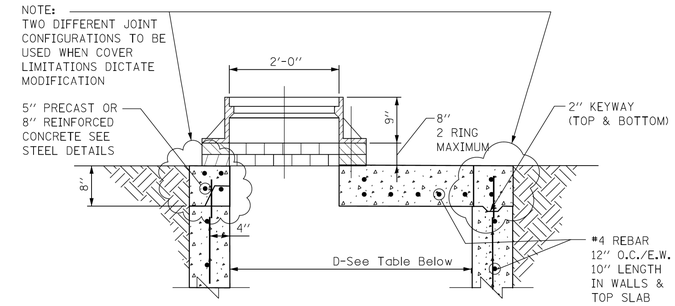

STANDARD FLAT TOP SLAB
FOR CATCH BASINS

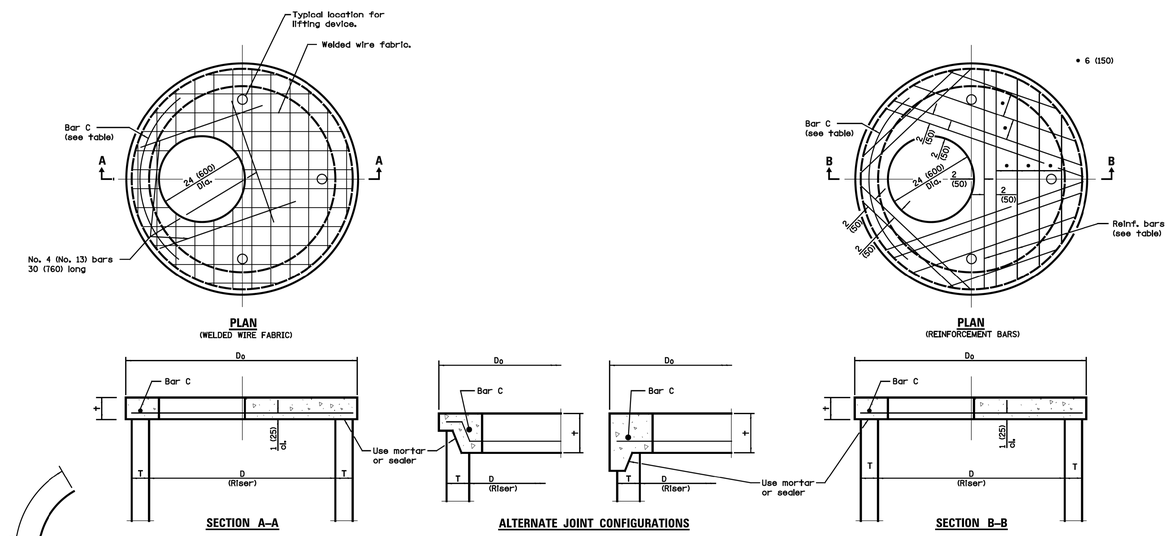

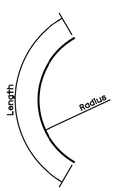

BAR C

TABLE

D	T	Do (min.)	t	Reinforcement "As" W.W.F. each direction	OR Bar size	No. 4 (No. 13) Bar C Length	Radius
36 (900)	See applicable Standards	D + 2T	6 (150)	0.20 sq. in./ft. (425 sq. mm/m)	No. 4 (No. 13)	4'-0" (1.2 m)	19 (480)
4'-0" (1.2 m)			6 (150)	0.35 sq. in./ft. (740 sq. mm/m)	No. 5 (No. 16)	4'-6" (1.35 m)	26 (660)
5'-0" (1.5 m)			8 (200)	0.35 sq. in./ft. (740 sq. mm/m)	No. 5 (No. 16)	5'-0" (1.5 m)	32 (810)

GENERAL NOTES

The flat slab top may be used in lieu of the tapered tops shown on Standards 602001, 602016, 602306, 602401, or 602501 at the option of the Contractor or when field conditions prohibit the use of tapered tops.

All dimensions are in millimeters (inches) unless otherwise shown.

PRECAST REINFORCED CONCRETE FLAT SLAB TOP

STANDARD 602601-03

NOTES:
FLAT TOP SLAB AAPLICATION CAN ONLY BE USED WITH WRITTEN PERMISSION FROM CDWM.
USE LATEST IDOT DETAIL, #602601

STANDARD REVISIONS	
DATE	DESCRIPTION
1/5/15	APPROVED PLAN

PERCENT COMPLETE	DATE
30	
60	
75	
90	
100	
BULLETIN	

CITY OF CHICAGO
DEPARTMENT OF WATER MANAGEMENT
BUREAU OF ENGINEERING SERVICES

FLAT TOP SLAB DETAILS

DRAWN: SBM
DESIGNED:
CHECKED:
REVIEWED:

A.4

___ OF ___

PN _____

$FILE$
$DATE$

CDWM_Details.pl 8/5/2015 10:30:51 AM

MODEL: Default
FILE NAME: \\cnect-fs001\cnect-nas\ 2025\ Projects\Green Alley\0 PBC Alley Revisions\2025\Package 6\CADD Drawings\23-CP37 W. Greenleaf Ave & N. Glenwood Ave\CADD Sheets\CP37-cht-dwm-1.dgn

USER NAME = AB	DESIGNED -	REVISED -	
	DRAWN -	REVISED -	
PLOT SCALE = 10.0000 ' / in.	CHECKED -	REVISED -	
PLOT DATE = 7/1/2025	DATE - 07/01/2025	REVISED - 07/10/2025	

CITY OF CHICAGO
DEPARTMENT OF TRANSPORTATION
49th WARD

CDWM STANDARD CONSTRUCTION DETAILS
PBC PROJECT NO #22926
W. GREENLEAF AVENUE - W. LUNT AVENUE
N. GLENWOOD AVENUE - N. SHERIDAN ROAD

OUC NUMBER	COUNTY	TOTAL SHEETS	SHEET NO.
OUC IR #123805	COOK	24	18
	SCALE: NTS		

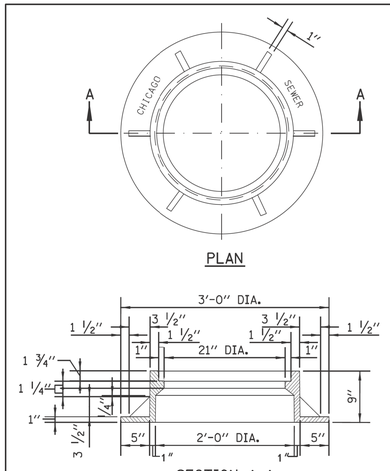

NOTE: METAL PLATES MUST BE FURNISHED FOR PERFORATED LIDS ON MANHOLES.

HEAVYWEIGHT MANHOLE FRAME

MATERIAL: CAST IRON

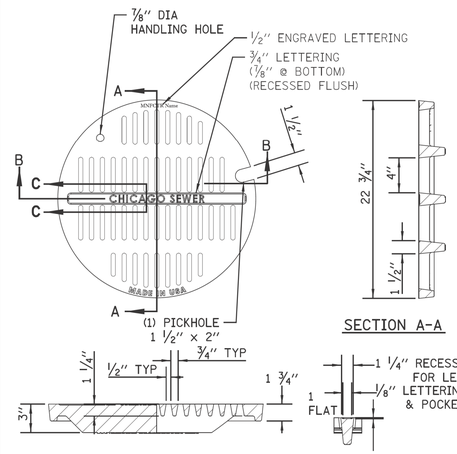

MATERIALS
GRATE-GRAY IRON
ASTM A48 CL35B

DESIGN LOAD
HEAVY DUTY

COATING
UNDIPPED

OPEN AREA
85.6 SQ. IN.

STANDARD CB/MH LID

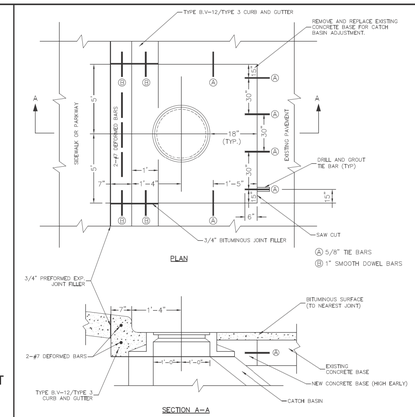

NOTES:

IF THE ADJUSTMENT EXCEEDS AN 8" HEIGHT, THE CONE MUST BE REMOVED AND THE BARREL SECTION MUST BE ADJUSTED.

THE CONTRACTOR IS REQUIRED TO REPLACE ANY BROKEN FRAMES AND LIDS OF SEWER STRUCTURES WITH STANDARD FRAMES AND LIDS OF THE DWM. IN ADJUSTMENT OR RECONSTRUCTION OF SEWER STRUCTURES, ANY NON-STANDARD FRAMES AND LIDS MUST BE REPLACED WITH STANDARD FRAMES AND LIDS. IN ADJUSTMENT OR RECONSTRUCTION OF INLETS, ANY NON-STANDARD INLETS (GUTTER BOXES) MUST BE REPLACED WITH DWM STANDARD INLETS.

THE FRAMES AND LIDS OF SEWER STRUCTURES TO BE ABANDONED, REMOVED, OR FILLED MUST BE SALVAGED AND THE DWM NOTIFIED FOR PICK UP.

MANHOLES, CATCH BASINS AND INLETS MUST BE PROTECTED FROM THE ENTRY OF ASPHALT/DEBRIS INTO THE SEWER SYSTEM DURING CONSTRUCTION. THE CONTRACTOR MUST MARK LOCATIONS OF ALL SEWER STRUCTURES ON THE SIDEWALK BEFORE STARTING PAVEMENT REMOVAL/REPLACEMENT. ADJUSTMENT OF FRAMES AND LIDS OF SEWER STRUCTURES MUST BE COMPLETED PRIOR TO STREET RESURFACING.

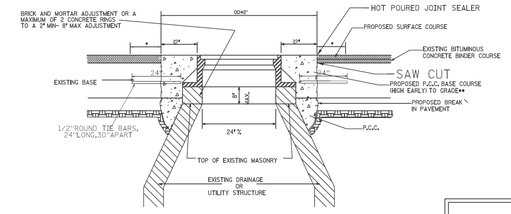

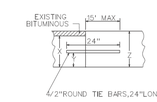

SEE CONSTRUCTION DETAILS (FOR MISCELLANEOUS STRUCTURES)
X = THICKNESS OF PAVEMENT
Y = ONE HALF THE THICKNESS OF CONCRETE PAVEMENT OR CONCRETE BASE.
Z = 10" OR THICKNESS OF PROPOSED PAVEMENT - WHICHEVER IS GREATER

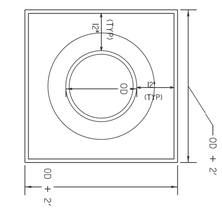

PLAN VIEW (BASE TO GRADE)

*REFER TO CDOT FOR ASPHALT RESTORATION REQUIREMENTS & CRACK SEALING.

** ON NON-MORATORIUM STREETS, FULL-DEPTH PCC BASE COURSE MAY BE UTILIZED. ON MORATORIUM STREETS, PAVEMENT RESTORATION SHALL ADHERE T CDOT REQUIREMENTS.

DETAIL OF FRAME ADJUSTMENT

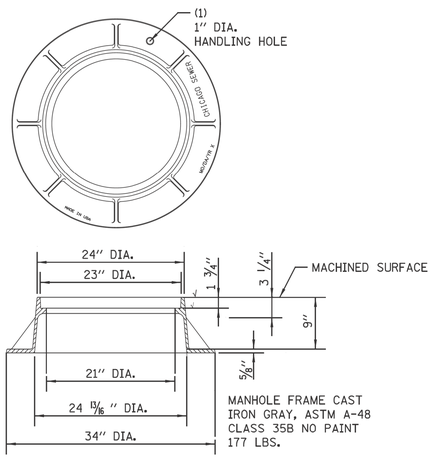

LIGHTWEIGHT MANHOLE FRAME

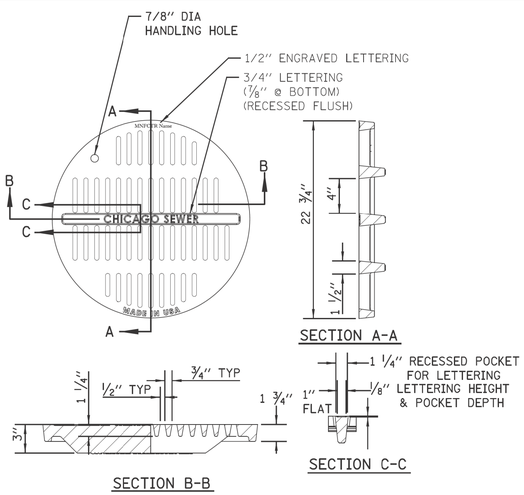

ADA COMPLIANT CATCH BASIN/MANHOLE LID

NOTE:
NOT TO BE USED WITHOUT PRIOR APPROVAL OF CDWM

MATERIALS
GRATE-GRAY IRON
ASTM A48 CL35B

DESIGN LOAD
HEAVY DUTY

COATING
UNDIPPED

OPEN AREA
85.6 SQ. IN.

SOLID LID FOR MANHOLES

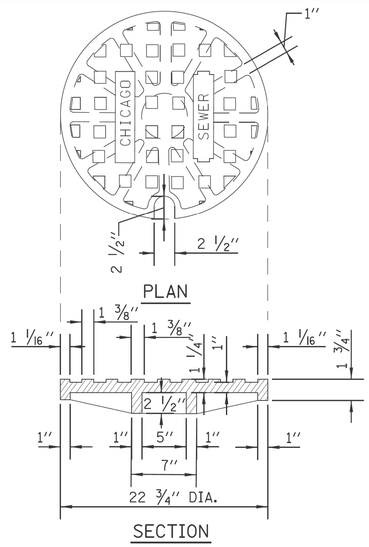

STANDARD REVISIONS	
DATE	DESCRIPTION
2/5/21	Approved

PERCENT COMPLETE	DATE
30	
60	
75	
90	
100	
BULLETIN	

CITY OF CHICAGO
DEPARTMENT OF WATER MANAGEMENT
BUREAU OF ENGINEERING SERVICES

MANHOLE
LIDS AND FRAMES

DRAWN: SBW
DESIGNED:
CHECKED: GD, GC, SO
REVIEWED:

A.21

___ OF ___

PN _____

$FILE$
$DATE$

CDWM_Details.cel 2/5/2021 4:58:20 PM

MODEL: Default
FILE NAME: \\cnect-fs001\cnect-nas\ 2025\ Projects\Green Alley\0 PBC Alley Revisions\2025\Package 6\CADD Drawings\23-CP37 W. Greenleaf Ave & N. Glenwood Ave\CADD Sheets\CP37-cht-dwm-2.dgn

USER NAME = AB	DESIGNED -	REVISED -	
	DRAWN -	REVISED -	
PLOT SCALE = 10.0000 ' / in.	CHECKED -	REVISED -	
PLOT DATE = 7/1/2025	DATE - 07/01/2025	REVISED - 07/10/2025	

CITY OF CHICAGO
DEPARTMENT OF TRANSPORTATION
49th WARD

CDWM STANDARD CONSTRUCTION DETAILS
PBC PROJECT NO #22926
W. GREENLEAF AVENUE - W. LUNT AVENUE
N. GLENWOOD AVENUE - N. SHERIDAN ROAD

OUC NUMBER	COUNTY	TOTAL SHEETS	SHEET NO.
OUC IR #123805	COOK	24	19
	SCALE: NTS		

STANDARD DRAINAGE STRUCTURES FOR PUBLIC STREETS

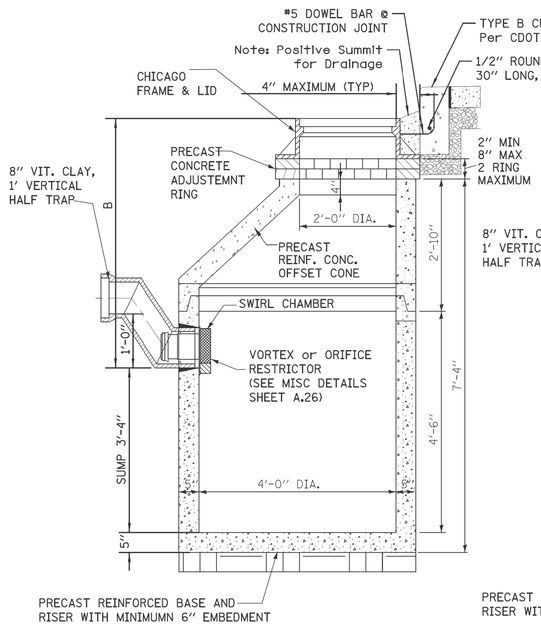

STANDARD CATCH BASIN-4' DIA.

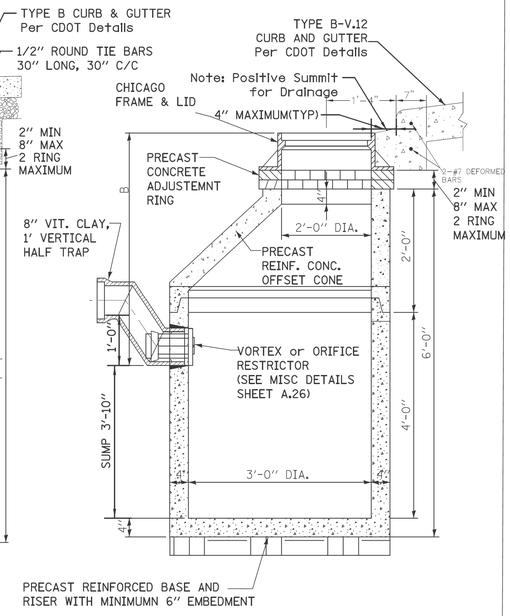

STANDARD CATCH BASIN-3' DIA.

STANDARD DRAINAGE STRUCTURES FOR PUBLIC ALLEYS

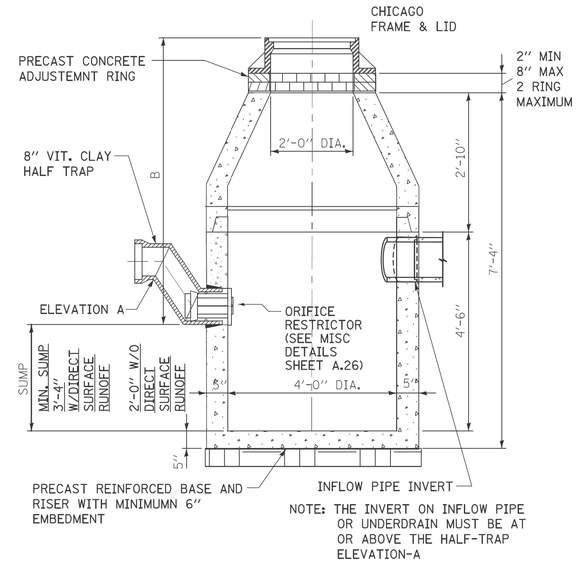

CATCH BASIN-ORIFICE RESTRICTOR

N.T.S.

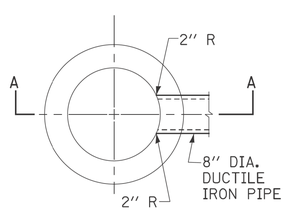

PLAN

(FRAME & LID NOT SHOWN)

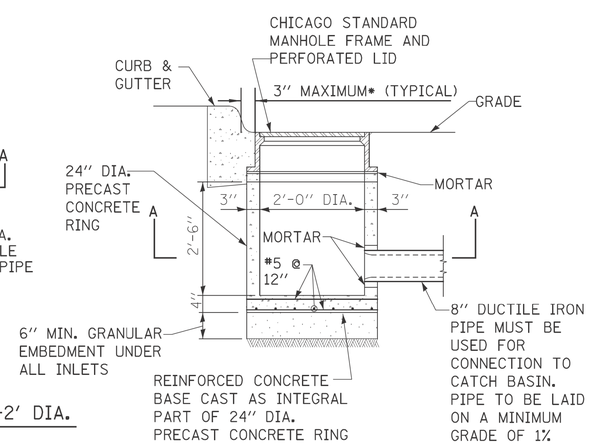

STANDARD INLET-2' DIA.

GENERAL NOTES:

1. CATCH BASIN TO CATCH BASIN CONNECTIONS ARE ALLOWED IN PRIVATE SITES & ALLEYS. ONLY THE DOWNSTREAM CATCH BASIN IS REQUIRED TO HAVE A HALF-TRAP.

2. IF B < 4 FEET, THEN USE A FLAT TOP SLAB CATCH BASIN AS NECESSARY.

3. FOR TRENCH BACKFILL, REFER TO IDOT SSRBC, ARTICLE 1003.04.

4. FOR GRANULAR EMBEDMENT, USE CA-11, CRUSHED GRAVEL, CRUSHED STONE, OR CRUSHED CONCRETE.

5. FOR STABILIZATION STONE, 12" OF CA-1 STONE IS ONLY REQUIRED WHEN UNSTABLE MATERIAL IS ENCOUNTERED AT TRENCH BOTTOM.

6. INLETS AND 3' DIAMETER CATCH BASINS ARE TO BE USED ONLY WITH PRIOR APPROVAL OF THE DEPT OF WATER MANAGEMENT- ENGINEERING SERVICES, SEWER SECTION, AND THE DEPT. OF BUILDINGS STORMWATER REVIEWER.

7. IF COVER OVER VCP IS LESS THAN 3', USE 45 DEGREE DIP BENDS WITH 1 FOOT DROP AS HALF TRAPS AS NEEDED FOR IEPA CLEARANCE REQUIREMENTS

STANDARD REVISIONS	
DATE	DESCRIPTION
2/5/21	APPROVED

PERCENT COMPLETE	DATE
30	
60	
75	
90	
100	
BULLETIN	

CITY OF CHICAGO
DEPARTMENT OF WATER MANAGEMENT
BUREAU OF ENGINEERING SERVICES

DRAINAGE STRUCTURE DETAILS

DRAWN: SDW
DESIGNED: ___
CHECKED: ___
REVIEWED: ___

A.22

___ OF ___

PN _____

$FILE$
$DATE$

CDWM_Details.cel 2/5/2021 2:00:11 PM

MODEL: Default
FILE NAME: \\cnect-fs001\cnect-nas_2025\Projects\Green Alley\0 PBC Alley Revisions\2025\Package 6\CADD Drawings\23-CP37 W. Greenleaf Ave & N. Glenwood Ave\CADD Sheets\CP37-cht-dwm-3.dgn

USER NAME = AB	DESIGNED -	REVISED -	
	DRAWN -	REVISED -	
PLOT SCALE = 10.0000 ' / in.	CHECKED -	REVISED -	
PLOT DATE = 7/1/2025	DATE - 07/01/2025	REVISED - 07/10/2025	

CITY OF CHICAGO
DEPARTMENT OF TRANSPORTATION
49th WARD

CDWM STANDARD CONSTRUCTION DETAILS
PBC PROJECT NO #22926
W. GREENLEAF AVENUE - W. LUNT AVENUE
N. GLENWOOD AVENUE - N. SHERIDAN ROAD

OUC NUMBER	COUNTY	TOTAL SHEETS	SHEET NO.
OUC IR #123805	COOK	24	20
	SCALE: NTS		

DRAINAGE STRUCTURES
RESTRICTORS

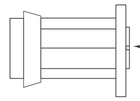

ORIFICE RESTRICTOR

INSERT THE RESTRICTOR INTO THE HALF-TRAP. UPON TIGHTENING OF THE CENTER NUT ON THE FACE OF THE RESTRICTOR, THE RUBBER O-RINGS WILL EXPAND INSIDE THE HALF TRAP, PROVIDING A WATER- TIGHT SEAL. PULL ON RESTRICTOR TO VERIFY THAT A TIGHT FIT IS MADE.

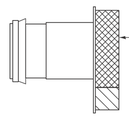

VORTEX RESTRICTOR

PULL ON RESTRICTOR TO VERIFY THAT A TIGHT FIT IS MADE.

INSERT THE RESTRICTOR WITH THE OPENING DOWN. UPON TIGHTENING OF THE 2 BOLTS ON THE FACE OF THE RESTRICTOR, THE RUBBER O-RINGS WILL PROVIDE A WATER- TIGHT SEAL.

GENERAL NOTES:

1. CATCH BASIN TO CATCH BASIN CONNECTIONS ARE ALLOWED IN PRIVATE SITES & ALLEYS. ONLY THE DOWNSTREAM CATCH BASIN IS REQUIRED TO HAVE A HALF-TRAP.

2. IF B < 4 FEET, THEN USE A DUCTILE IRON PIPE HALF TRAP AND FLAT TOP SLAB CATCH BASIN AS NECESSARY.

3. INLETS AND 3' DIAMETER CATCH BASINS ARE TO BE USED ONLY WITH PRIOR APPROVAL OF DWM FIELD INSPECTOR.

RESTRICTOR NOTES:
THE DWM'S RAIN BLOCKER RESTRICTOR PROGRAM MUST BE MAINTAINED WITH ANY ROADWAY IMPROVEMENT.

THE DESIGN OF ANY ROADWAY IMPROVEMENT MUST CONSIDER LIMITING THE NUMBER OF CATCH BASINS TO THE EXTENT PRACTICAL. THE NUMBER OF EXISTING STRUCTURES SHOULD NOT BE INCREASED.

THE RESTRICTORS CAN BE OBTAINED FROM DWM CENTRAL DISTRICT AT 3901 S. ASHLAND AVE. THE CONTRACTOR SHOULD ARRANGE FOR PICK UP BY CONTACTING 312-747-8736 (7AM TO 3PM, M-F). CONTRACTOR MUST CALL 48 HOURS IN ADVANCE OF PICK UP DATE AND TIME.

FLOW RESTRICTORS MUST BE INSTALLED IN ALL CATCH BASINS OUTSIDE OF THE CENTRAL BUSINESS DISTRICT(LIMITS: NORTH AVE, CERMAK AVE, HALSTED AVE, LAKE MICHIGAN). RESTRICTORS MUST NOT BE INSTALLED IN CATCH BASINS IN CLOSE PROXIMITY TO VIADUCT AREAS, BUS STOPS, OR EMERGENCY ENTRANCES. THE DWM MUST APPROVE THE NON-INSTALLATION OR REMOVAL OF ANY RESTRICTOR. REQUIREMENTS FOR RESTRICTOR INSTALLATION ARE AS FOLLOWS:

- ARTERIAL STREETS: 3-INCH ORIFICE RESTRICTOR
- BUS ROUTES: 3-INCH ORIFICE RESTRICTOR
- RESIDENTIAL STREETS: 3-INCH VORTEX RESTRICTOR
- ALLEYS: 3-INCH ORIFICE RESTRICTOR IN THE LAST CB.
- CLOSED LIDS ARE REQUIRED ON ALL MANHOLES EXCEPT AT INTERSECTIONS WHERE A PERFORATED LID SHALL BE USED.

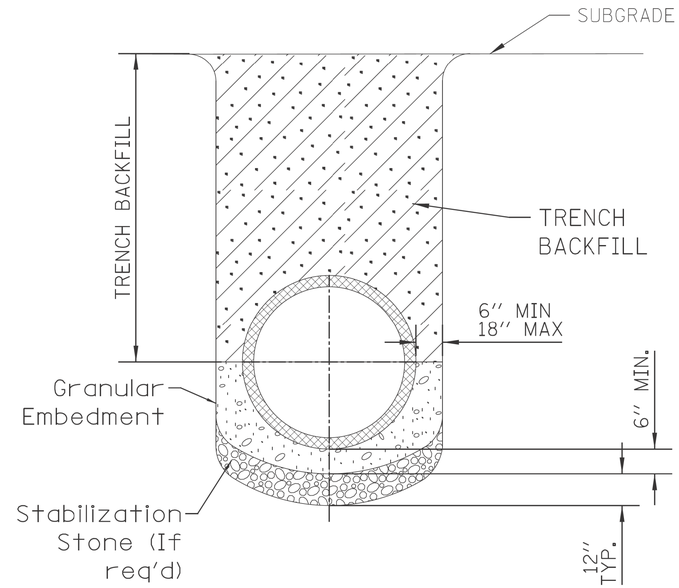

NOTE:
1. FOR TRENCH BACKFILL, REFER TO IDOT SSRBC, ARTICLE 1003.04.

2. FOR GRANULAR EMBEDMENT, USE CA-11, CRUSHED GRAVEL, CRUSHED STONE, OR CRUSHED CONCRETE.

3. FOR STABILIZATION STONE, 12'' OF CA-1 STONE IS ONLY REQUIRED WHEN UNSTABLE MATERIAL IS ENCOUNTERED AT TRENCH BOTTOM.

4. AGGREGATE PLACED FOR TEMPORARY SURFACE RESTORATION WILL NOT BE PAID SEPARATELY AND SHALL BE INCIDENTAL TO THE CONTRACT.

SEWER TRENCH DETAIL

NOTE:
PLUG TO BE COATED WITH MORTAR AND DRIVEN INTO PLACE WITH A WOODEN MALLET AND THEN SEALED WITH MORTAR.

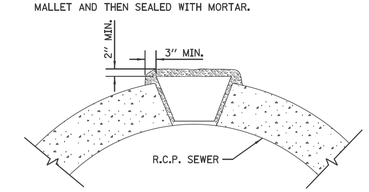

LIFTING HOLE PLUG DETAIL FOR CONCRETE PIPE

NOTE:
1. ALL PLUG MATERIALS MUST COMPLY WITH 1042.16 OF THE IDOT SSRBC.

2. LIFT HOLES ON COMBINED SEWERS ARE PROHIBITED WHEN THE WATER TABLE IS WITHIN 2 FEET OF THE PIPE INVERT, OR IF THE PIPE IS FULLY SUBMERGED UNDER NORMAL CONDITIONS.

STANDARD REVISIONS	
DATE	DESCRIPTION
2/5/21	APPROVED PLAN

PERCENT COMPLETE	DATE
30	
60	
75	
90	
100	
BULLETIN	

CITY OF CHICAGO
DEPARTMENT OF WATER MANAGEMENT
BUREAU OF ENGINEERING SERVICES

MISCELLANEOUS DETAILS

DRAWN: SBM
DESIGNED: ___
CHECKED: GD, GC, SO
REVIEWED:

A.26

___ OF ___

PN _____

$FILE$
$DATE$

CDWM_Details.cel 2/5/2021 2:07:40 PM

MODEL: Default
FILE NAME: \\cnect-fs001\cnect-nas\ 2025\ Projects\Green Alley\0 PBC Alley Revisions\2025\Package 6\CADD Drawings\23-CP37 W. Greenleaf Ave & N. Glenwood Ave\CADD Sheets\CP37-cht-dwm-4.dgn

USER NAME = AB	DESIGNED -	REVISED -	
	DRAWN -	REVISED -	
PLOT SCALE = 10.0000 ' / in.	CHECKED -	REVISED -	
PLOT DATE = 7/1/2025	DATE - 07/01/2025	REVISED - 07/10/2025	

CITY OF CHICAGO
DEPARTMENT OF TRANSPORTATION
49th WARD

CDWM STANDARD CONSTRUCTION DETAILS
PBC PROJECT NO #22926
W. GREENLEAF AVENUE - W. LUNT AVENUE
N. GLENWOOD AVENUE - N. SHERIDAN ROAD

OUC NUMBER	COUNTY	TOTAL SHEETS	SHEET NO.
OUC IR #123805	COOK	24	21
	SCALE: NTS		

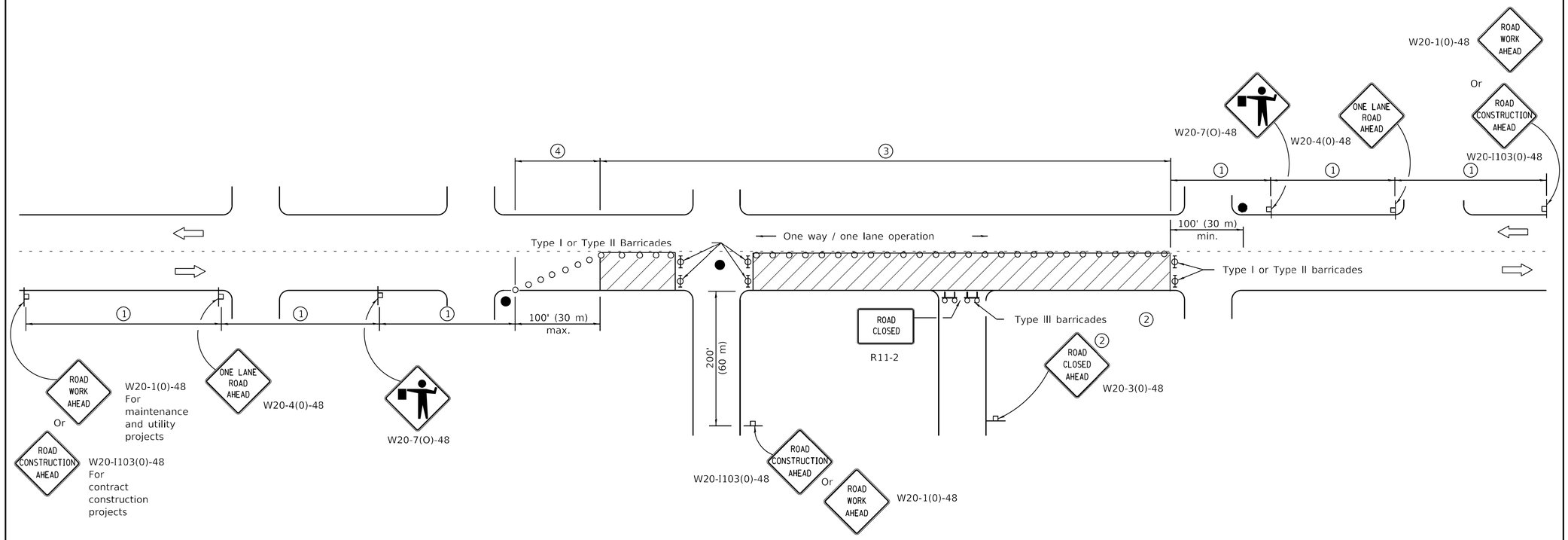

SIGN SPACING	
Posted Speed	Sign Spacing
55	500' (150 m)
50-45	350' (100 m)
<45	200' (60 m)

SYMBOLS

- Work area
- Cone, drum or barricade (not required for moving operations)
- Sign on portable or permanent support
- Flagger with traffic control sign
- Barricade or drum with flashing light
- Type III barricade with flashing lights

1. Refer to SIGN SPACING TABLE for distances.
2. For approved sideroad closures.
3. Cones at 25' (8 m) centers for 250' (75 m). Additional cones may be placed at 50' (15 m) centers. When drums or Type I or Type II barricades are used. the interval between devices may be doubled.
4. Cones, drums or barricades at 20' (6 m) centers.

GENERAL NOTES

This Standard is used where at any time, day or night, any vehicle, equipment, workers or their activities
encroach on the pavement requiring the closure of one traffic lane in an urban area.

All dimensions are in inches (millimeters) unless otherwise shown.

Illinois Department of Transportation

PASSED January 1, 2011
ENGINEER OF SAFETY ENGINEERING

APPROVED January 1, 2011
ENGINEER OF DESIGN AND ENVIRONMENT

ISSUED 1-1-97

DATE	REVISIONS
1-1-11	Revised flagger sign.
1-1-09	Switched units to
	English (metric).
	Corrected sign No.'s.

URBAN LANE CLOSURE, 2L, 2W, UNDIVIDED

STANDARD 701501-06

MODEL: Default
FILE NAME: \\cnect-fs001\cnect-nas\ 2025\ Projects\Green Alley\0 PBC Alley Revisions\2025\Package 6\CADD Drawings\23-CP37 W. Greenleaf Ave & N. Glenwood Ave\CADD Sheets\CP37-sht-std01-1.dgn

CDOT

USER NAME = AB	DESIGNED -	REVISED -	
	DRAWN -	REVISED -	
PLOT SCALE = 10.0000 ' / in.	CHECKED -	REVISED -	
PLOT DATE = 7/1/2025	DATE - 07/01/2025	REVISED - 07/10/2025	

CITY OF CHICAGO
DEPARTMENT OF TRANSPORTATION
49th WARD

IDOT STANDARD DETAILS
PBC PROJECT NO #22926
W. GREENLEAF AVENUE - W. LUNT AVENUE
N. GLENWOOD AVENUE - N. SHERIDAN ROAD

OUC NUMBER	COUNTY	TOTAL SHEETS	SHEET NO.
OUC IR #123805	COOK	24	22
	SCALE: NTS		

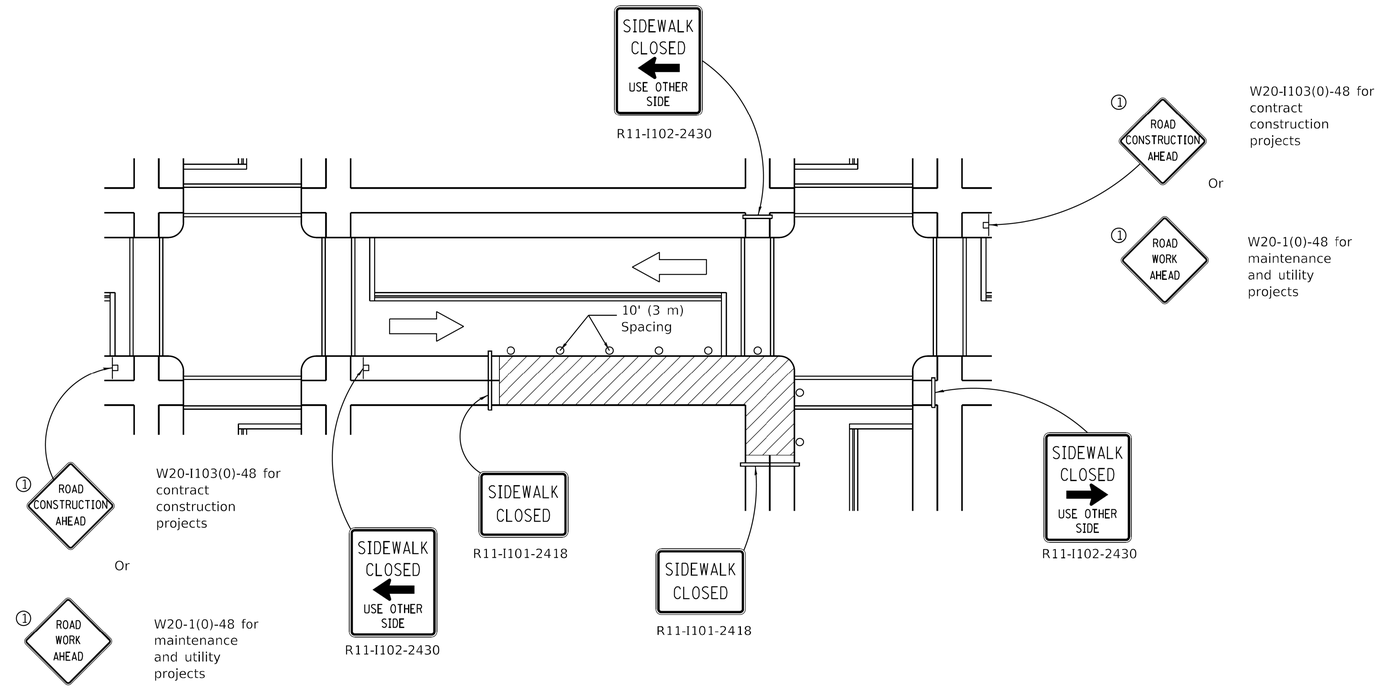

CORNER CLOSURE

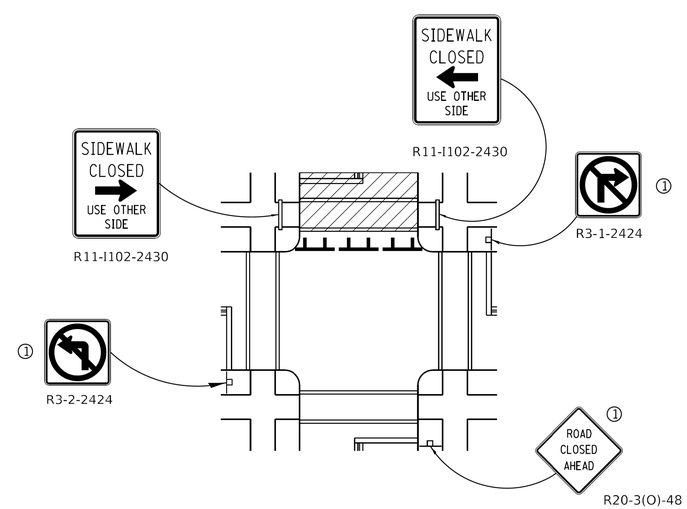

CROSSWALK CLOSURE

Illinois Department of Transportation

PASSED April 1, 2016

ENGINEER OF SAFETY ENGINEERING

APPROVED April 1, 2016

ENGINEER OF DESIGN AND ENVIRONMENT

ISSUED 1-1-97

SIDEWALK, CORNER OR CROSSWALK CLOSURE

(Sheet 2 of 2)

STANDARD 701801-06

MODEL: Default
FILE NAME: \\cnect-fs001\cnect-nas\ 2025\ Projects\Green Alley\0 PBC Alley Revisions\2025\Package 6\CADD Drawings\23-CP37 W. Greenleaf Ave & N. Glenwood Ave\CADD Sheets\CP37-sht-std-3.dgn

USER NAME = AB	DESIGNED -	REVISED -	
	DRAWN -	REVISED -	
PLOT SCALE = 10.0000 ' / in.	CHECKED -	REVISED -	
PLOT DATE = 7/1/2025	DATE - 07/01/2025	REVISED - 07/10/2025	

CDOT

CITY OF CHICAGO
DEPARTMENT OF TRANSPORTATION
49th WARD

IDOT STANDARD DETAILS
PBC PROJECT NO #22926
W. GREENLEAF AVENUE - W. LUNT AVENUE
N. GLENWOOD AVENUE - N. SHERIDAN ROAD

OUC NUMBER	COUNTY	TOTAL SHEETS	SHEET NO.
OUC IR #123805	COOK	24	24
	SCALE: NTS		